**MICRO SWITCH**
FREEPORT, ILLINOIS, U.S.A.
A DIVISION OF HONEYWELL
FED. MFG. CODE 91929

# PACKET

CATALOG LISTING
**9PA68**

THIS DRAWING COVERS A PROPRIETARY ITEM AND IS THE PROPERTY OF MICRO SWITCH, A DIVISION OF HONEYWELL. THIS DRAWING IS NOT TO BE COPIED OR USED WITHOUT THE APPROVAL OF MICRO SWITCH.

DRAWING NUMBER: M 9PA68
ISSUE: 1
RELEASE NO. PR-694
REPLACES
CHECK
REVISIONS
CHECK
CHECK: LSD 7 MAY 69
DRAWN: G C H 5 MAY 1969
0-50378-2A

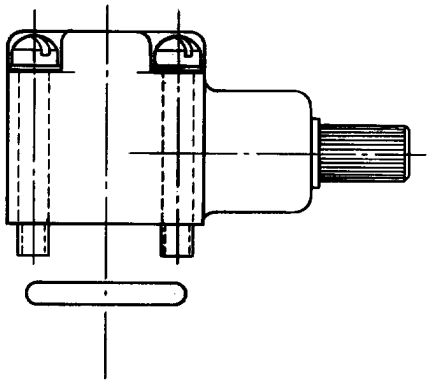

NOTE-
1 - SEAL RING FURNISHED UNASSEMBLED WITH PACKET

SCALE FULL
DO NOT SCALE PRINT

UNLESS OTHERWISE NOTED
DIMENSIONS ARE IN INCHES
**TOLERANCES ARE:**

| | | |
|---|---|---|
| ONE PLACE | (.0) | ±.030 |
| TWO PLACE | (.00) | ±.015 |
| THREE PLACE | (.000) | ±.005 |
| ANGLES | | ±° |

WEIGHT

Downloaded from Elcodis.com electronic components distributor