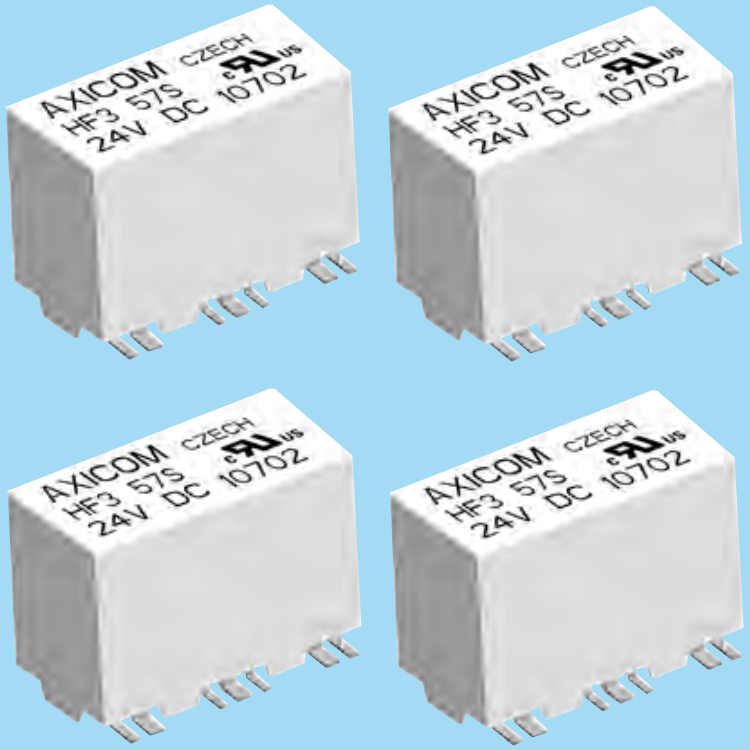

AXICOM

Telecom-, Signal and RF Relays

HF3 S Relay

Tyco Electronics

Our commitment. Your advantage.

108-98021 • Aug. 08 Rev. B • ECOC: JM10

HF3 S Relay

Disclaimer

While Tyco Electronics has made every reasonable effort to ensure the accuracy of the information in this datasheet, Tyco Electronics does not guarantee that it is error-free, nor does Tyco Electronics make any other representation, warranty or guarantee that the information is accurate, correct, reliable or current. Tyco Electronics reserves the right to make any adjustments to the information contained herein at any time without notice. Tyco Electronics expressly disclaims all implied warranties (and all express warranties, except as otherwise stated in this datasheet) regarding the information contained herein, including but not limited to any implied warranties or merchantability or fitness for a particular purpose. It is recommended that you test any new or replacement product before incorporating into a system.

The dimensions in this datasheet are for reference purpose only and are subject to change without notice. Specifications are subject to change without notice.

Index

UL 508 File No. E 111441

HF3 S Relay

High performance low cost plastic sealed high frequency relay for 50/75 Ohm system, 1 pole, polarized coil Surface Mount Technology (SMT)

Relay types: non latching
latching 1 coil
latching 2 coils

ROHS compliant (Directive 2002/95/EC) all date codes.

Features

- Y-Design
- Frequency range DC to 3 GHz
- Impendance 50 Ω / 75 Ω
- Small dimensions (15 mm x 7.6 mm x 10.6 mm)
- 1 change over contact (1 form C / SPDT)
- Immersion cleanable
- Low power consumption (≤140 mW)

Typical applications

- Cable modems and linecards/ CATV
- TAP‘s
- Measurement and test equipment ATE
- Satellite / audio / video tuners
- Wireless base stations and antennas

HF3 S Relay

Dimensions

Dimensions in mm

50 Ohm Version

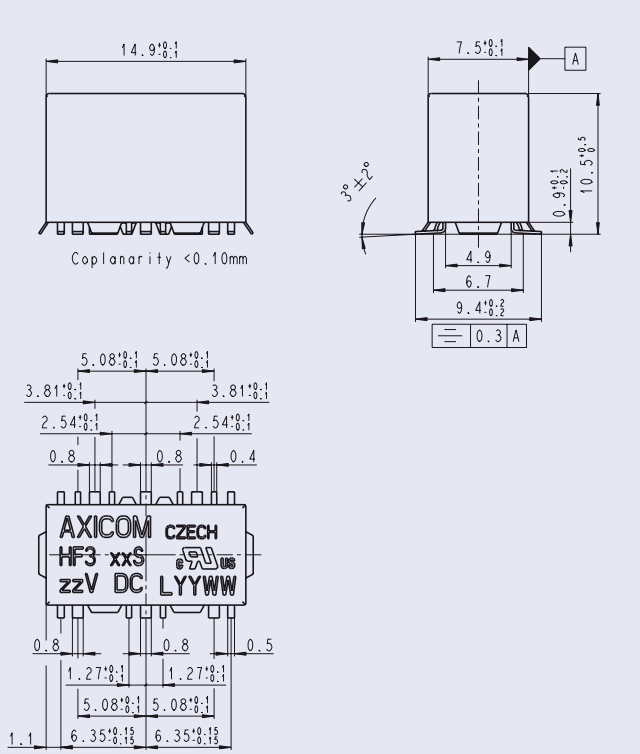

75 Ohm Version

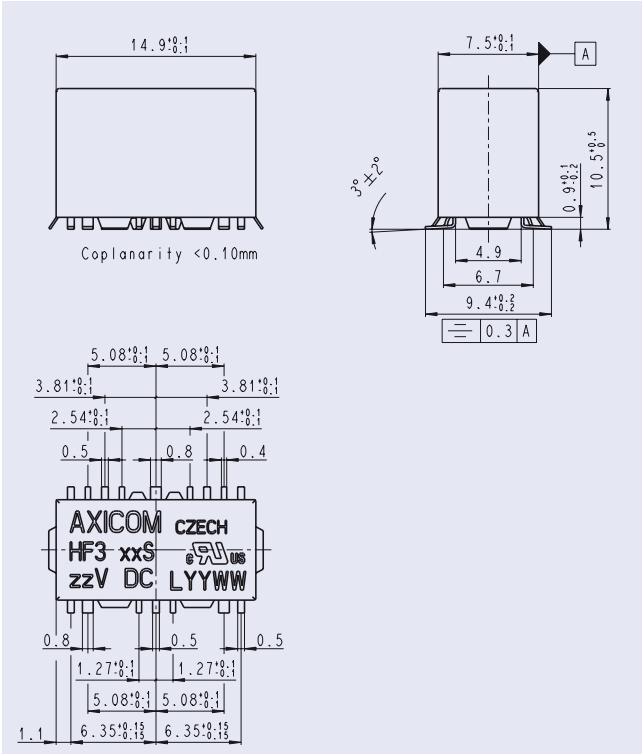

Solder pad layout

View onto the component side of the PCB (Top view)

Dimensions in mm

50 Ohm Version

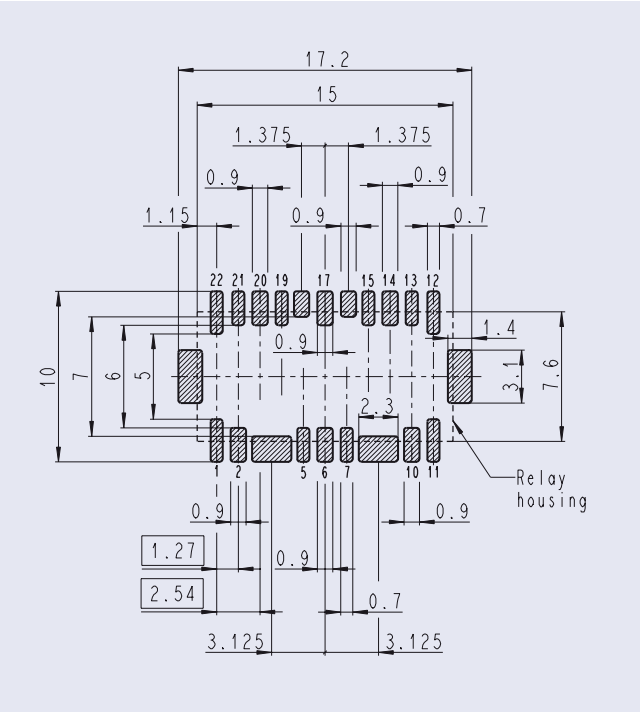

75 Ohm Version

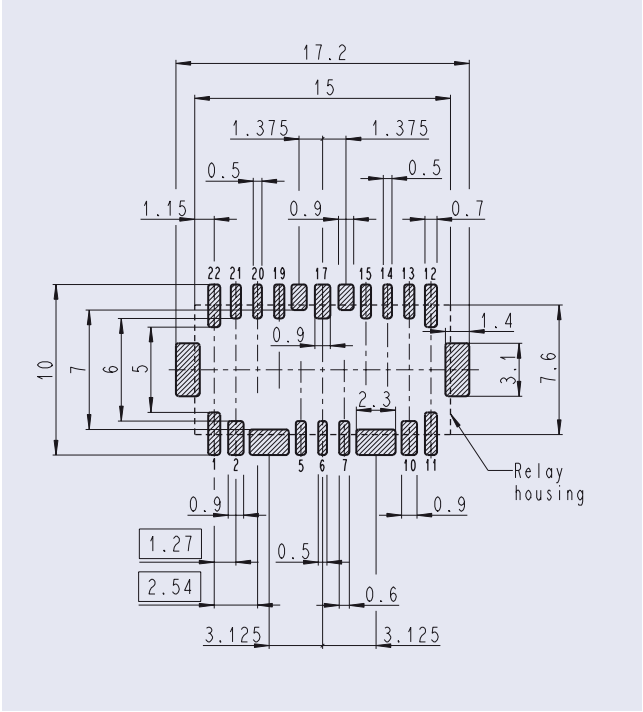

HF3 S Relay

Terminal assignment

Relay top view

Non-latching type,

not energized condition

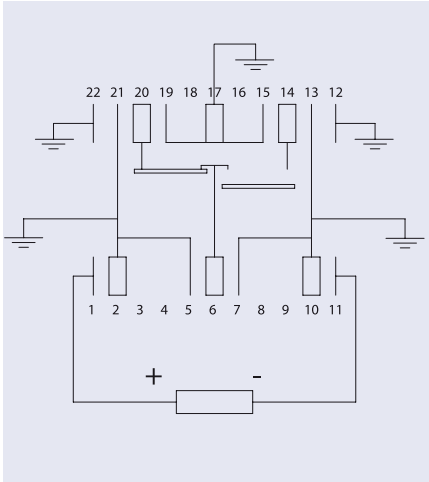

Latching type, 1 coil

rest condition

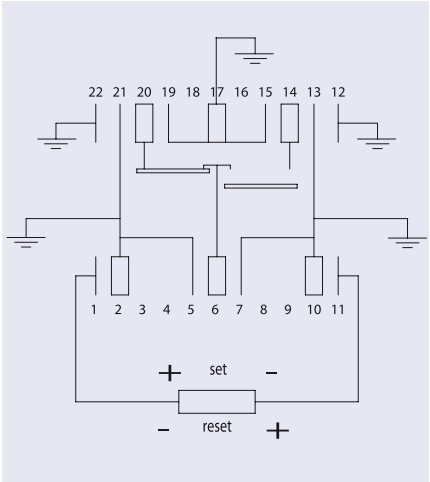

Contacts in reset position. Contact position might change during transportation and must be reset before use.

Latching type, 2 coils

reset condition

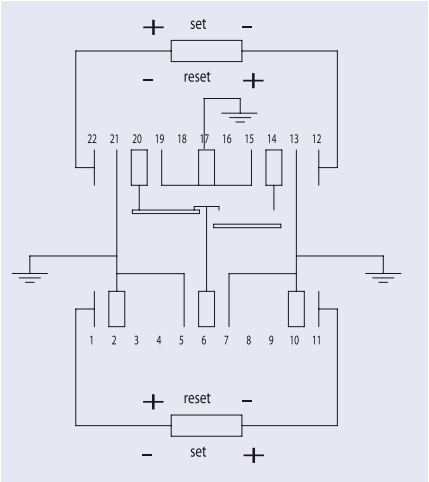

Coil Operating Range

140 mW

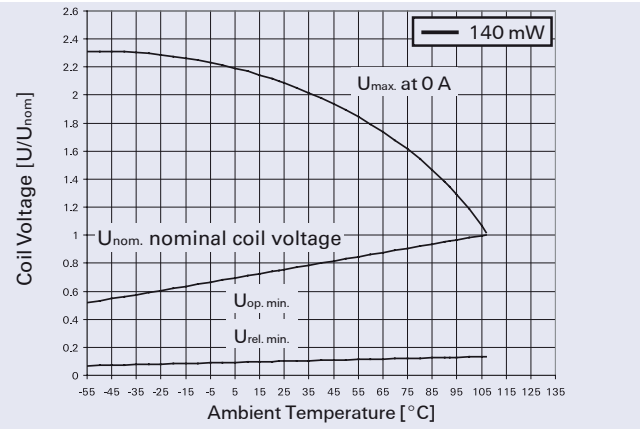

70 mW

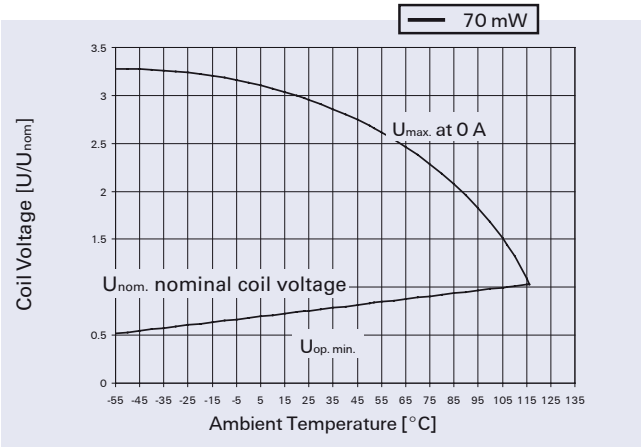

U_{nom} = Nominal coil voltage
$U_{max.}$ = Upper limit of the operative range of the coil voltage (limiting voltage)
$U_{op.\ min.}$ = Lower limit of the operative range of the coil voltage (reliable operate voltage) For latching relays $U_{set\ min.}$ resp. U_{reset} min.
$U_{rel.\ min.}$ = Lower limit of the operative range of the coil voltage (reliable release voltage)

HF3 S Relay

Coil Data (values at 23 °C) Ordering Information

Nominal voltage U_{nom}	Operate/set voltage range		Release/ reset voltage Minimum	Coil power	Coil Resistance	Relay code	Tyco part number
	Minimum voltage U_{min}	Maximum voltage U_{max}					
Vdc	Vdc	Vdc	Vdc	mW	Ω / ± 10 %		

50 Ohm Version

Non-Latching, 1 coil

5	3.75	10.90	0.50	140	178	HF3 53 S	2-1462051-3
24	18.00	52.30	2.40	140	4114	HF3 57 S	2-1462051-2

Latching, 2 coils

4.5	3.38	9.8	3.38	140	145	HF3 92 S	2-1462051-5
5	3.75	10.90	3.75	140	178	HF3 93 S	2-1462051-4
12	9.00	26.10	9.00	140	1028	HF3 96 S	2-1462051-6

75 Ohm Version

Non-Latching, 1 coil

5	3.75	10.90	0.50	140	178	HF3 03 S	2-1462050-2
9	6.75	19.60	0.90	140	574	HF3 05 S	2-1462050-3

Latching, 2 coils

5	3.75	10.90	3.75	140	178	HF3 43 S	2-1462050-4

Value

Further coil versions are available on request.

HF3 S Relay

Contact Data

Number of contacts and type	1 changeover (SPDT)
Contact material	Silver, gold-covered
Limiting continuous current at max. ambient temperature	2 A
Maximum switching current	2 A
Maximum swichting voltage	220 Vdc / 250 Vac
Maximum switching capacity	60 W / 62.5 VA / 50 W (2.5 GHz)
Initial contact resistance at 10 mA / 20 mV	< 100 mΩ
Mechanical endurance	10^7 operations
Max. Continuous RF-power	100 W @ 3 GHz (with appropriate cooling, only) 150 W @ 2 GHz (with appropriate cooling, only)
Peak RF-power	300 W (with appropriate cooling, only)

Insulation

Insulation resistance at 500 VDC	> 100 MΩ
Dielectric test voltage (1 min) between coil and contacts between open contacts	 1000 Vrms 600 Vrms
Surge voltage resistance according to FCC 68 (10 / 160 µs) and (2 / 10 µs) between coil and contacts between open contacts	 1500 V 1000 V

General Data

Operate time at U_{nom} typ./max.	3 ms / 5 ms
Reset time (latching) at Unom typ. / max.	3 ms / 5 ms
Release time without diode in parallel (non-latching) typ./max.	2 ms / 4 ms
Release time with diode in parallel (non-latching) typ./max.	4 ms / 6 ms
Duration of set / reset pulse (latching) min.	20ms*
Bounce time at closing contact typ. / max.	1 ms / 3 ms
Maximum switching rate without load	50 operations/s
Ambient temperature	-55 °C ... +85 °C
Thermal resistance	< 165 K/W
Maximum permissable coil temperature	125 °C
Vibration resistance (function)	35 G 10 to 1000 Hz
Shock resistance, half sinus, 11 ms	50 G (function) 150 G (damage)
Degree of protection / Environmental protection	immersion cleanable, IP 67 / RT III
Needle flame test	application time 20 s, burning time < 15 s
Mounting position	any
Processing information	Ultrasonic cleaning is not recommended
Weight (mass)	max. 3.0 g
Terminal surface	SnCu 0.7
Moisture sensitive level (JEDEC J-STD-020B)	MSL 3
Resistance to soldering heat	265 °C/10 s

* Duration may be shorter depending on pulse shape, voltage applied and ambiente temperature

HF3 S Relay

High Frequency Data

RF characteristics	50 Ω	75 Ω
Isolation at 100 MHz / 900 MHz / 3 GHz	-95dB / -80dB / -55dB	-96dB / -80dB / -50dB
Insertion loss at 100 MHz / 900 MHz / 3 GHz	-0.03dB / -0.12dB / -0.30dB	-0.03dB / -0.12dB / -0.30dB
V.S.W.R. at 100 MHz / 900 MHz / 3 GHz	1.05 / 1.10 / 1.25	1.05 / 1.20 / 1.30

50 Ω

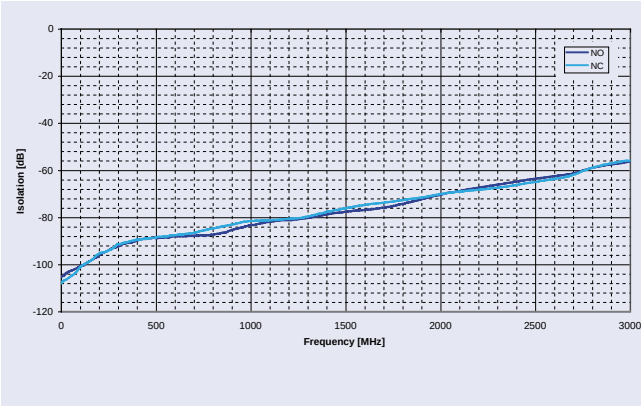

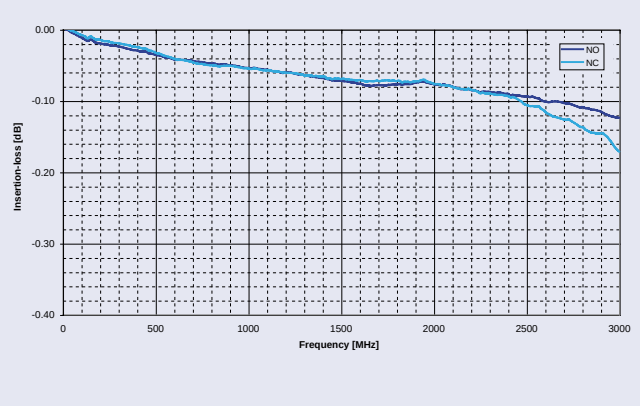

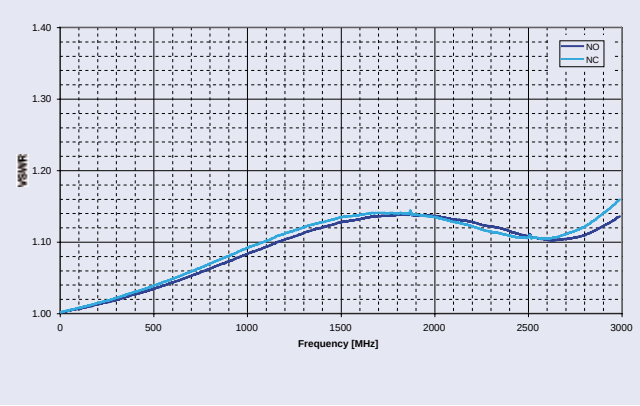

75 Ω

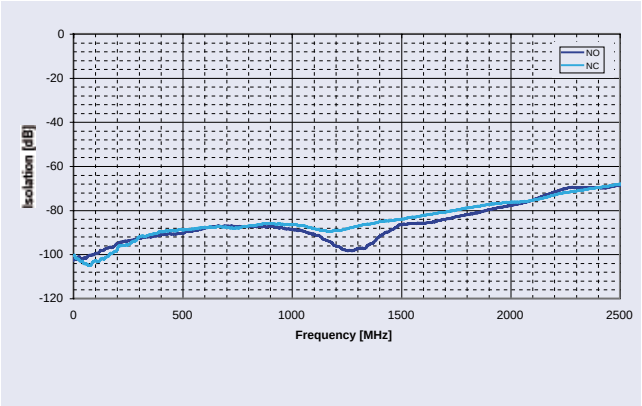

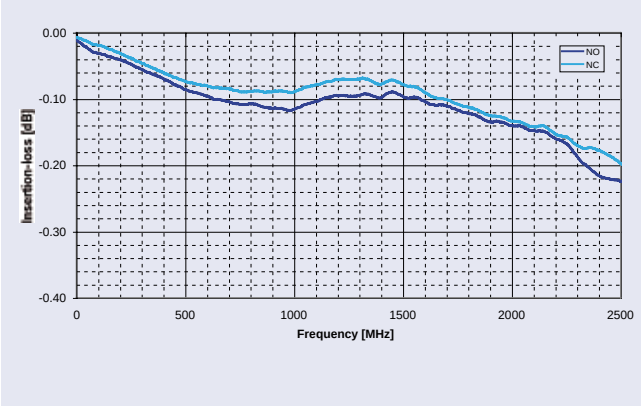

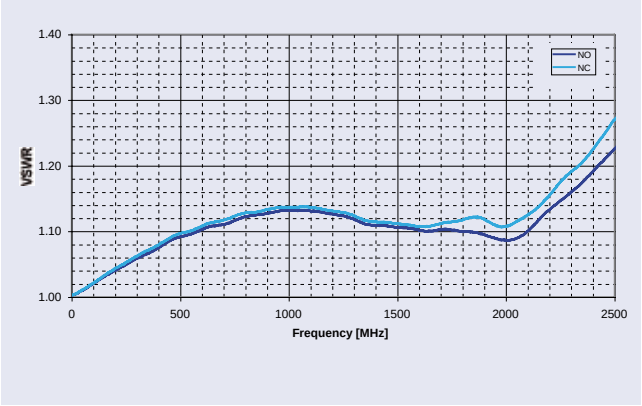

HF3 S Relay

Recommended Soldering Conditions

Soldering conditions according IEC 60058-2-58 and IPC/JEDEC J-STD-020B

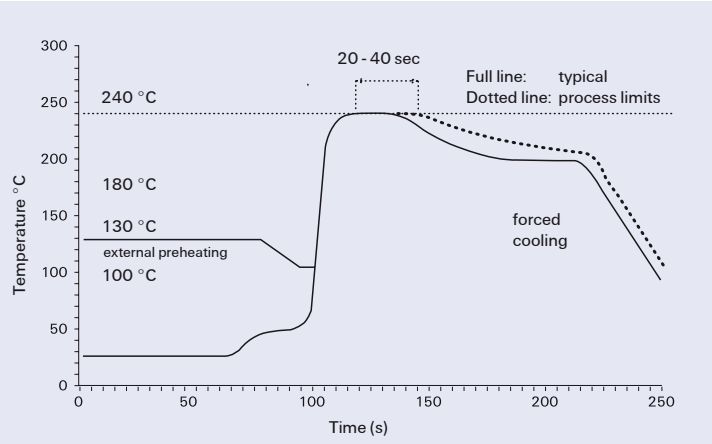

Vapor Phase Soldering: Temperature/Time Profile
(Lead and Housing Peak Temperature)

Recommended reflow soldering profile

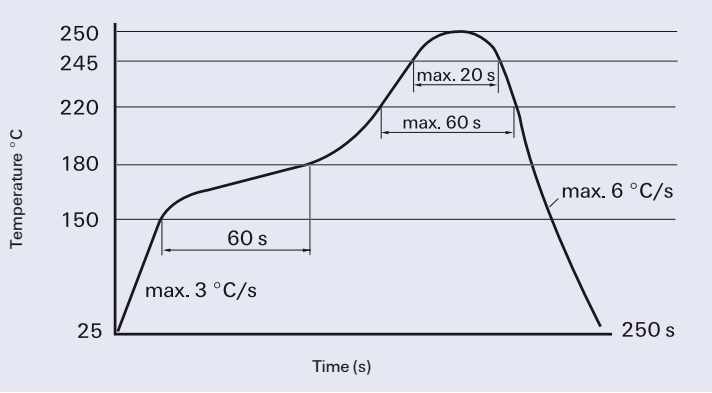

Infrared Soldering: Temperature/Time Profile
(Lead and Housing Peak Temperature)

Resistance to soldering heat - Reflow profile

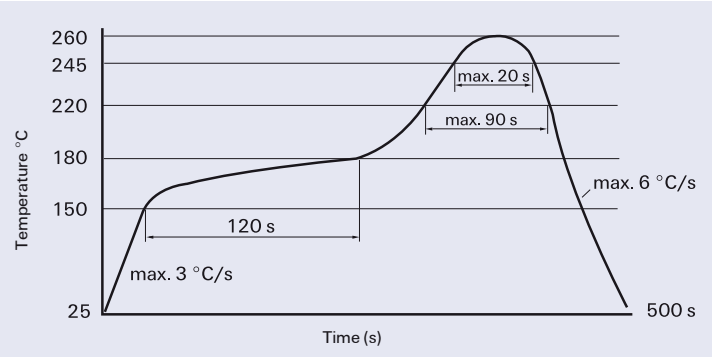

Infrared Soldering: Temperature/Time Profile
(Lead and Housing Peak Temperature)

HF3 S Relay

Packing

Dimensions in mm

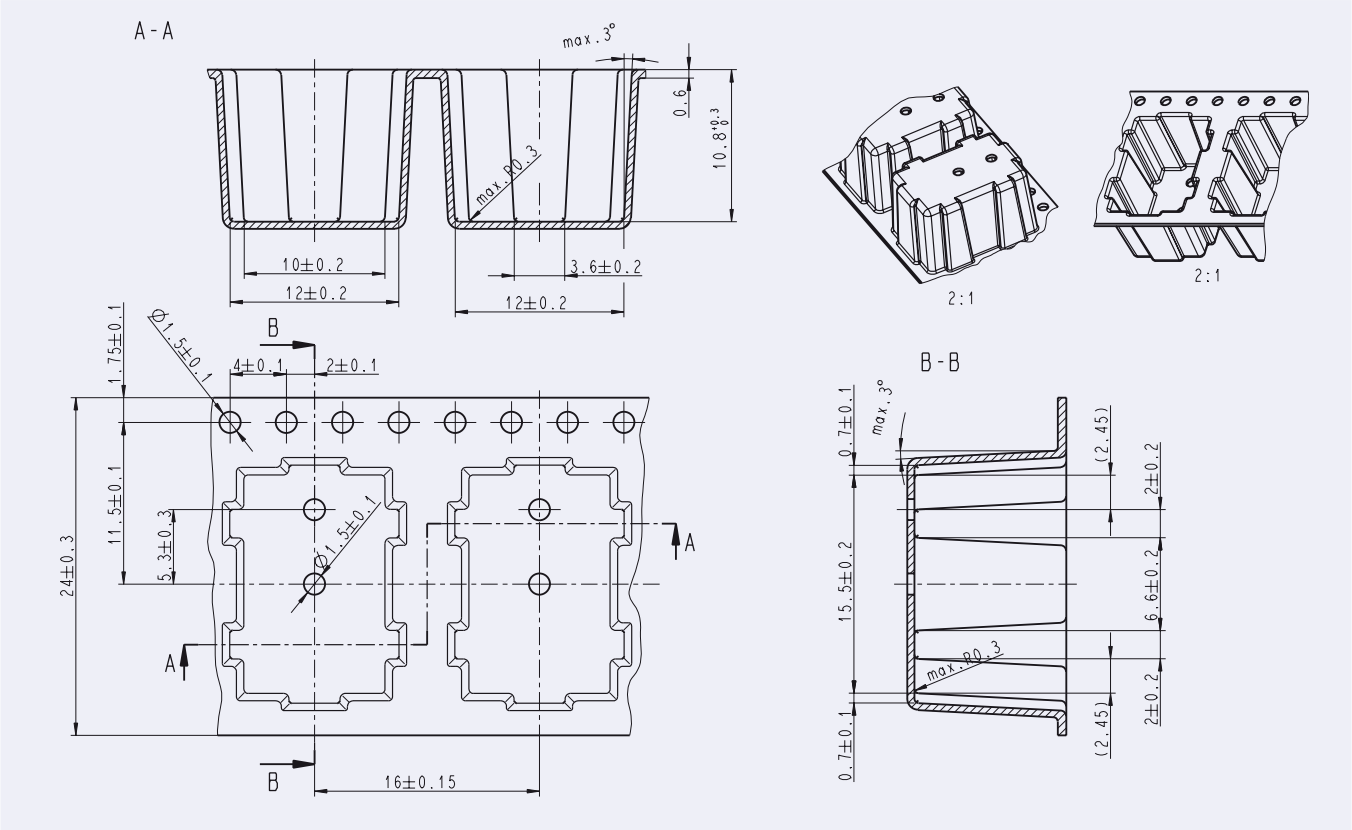

Tape and reel for SMT version
250 relays / reel
250 / box

Reel dimension

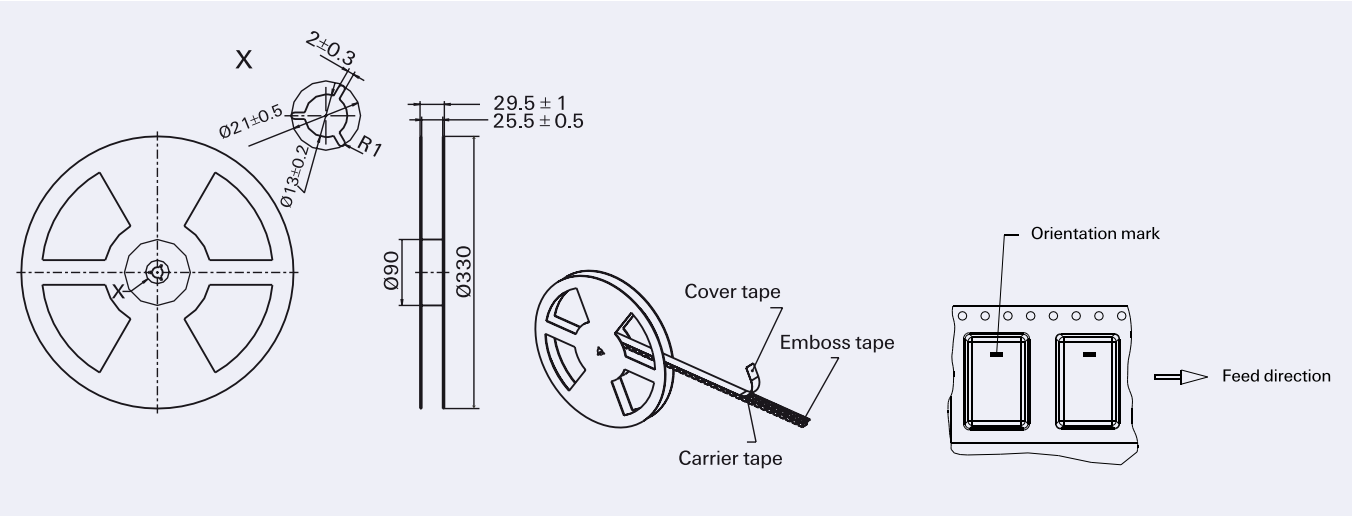

HF3 S Relay

IM Relays

4th generation slim line – low profile polarized 2 c/o telecom signal relay with bifurcated contacts, available as non latching or latching relay with 1 coil. Nominal voltage range from 1.5 ... 24 V, coil power consumption of 50 ... 200 mW, latching relays with 1 coil 100 mW. The IM relay is available as through hole and surface mount type (J-Legs and Gull Wings) and capable to switch loads up to 60 W/62,5 VA. It is currently the only 2 A rated 4G relay on the market. Dielectric strength fulfills the Telcordia requirements according GR 1089 (2,5 kV – 2 / 10 µs) and FCC part 68 (1,5 kV – 10 / 160 µs). The IM relay is tested according CECC/IECQ and certified in accordance with IEC/EN 60950 and UL 60950.
Dimensions approx. 10 x 6 mm board space and 5.65 mm height.

P2 Relays

3rd generation polarized 2 c/o telecom relay with bifurcated contacts, available as non latching or latching relay with 1 or 2 coils. Nominal voltage range from 3 ... 24 V, coil power consumption 140 mW, latching relays with 1 coil 70 mW. The P2 Relay is available as through hole or surface mount type and capable to switch currents up to 5 A. Dielectric strength fulfills the Telcordia requirements according GR 1089 (2,5 kV – 2 / 10 µs) and FCC part 68 (1,5 kV – 10 / 160 µs). The P2 relay is tested according CECC/IECQ and certified in accordance with IEC/EN 60950 and UL 60950.
Dimensions approx. 15 x 7,5 mm board space and 10 mm height.

FX2 Relays

3rd generation polarized 2 c/o telecom relay with bifurcated contacts, available as non latching or latching relay with 1 coil. Nominal voltage range from 3 ... 48 V, coil power consumption of 80 ... 260 mW for the high sensitive version, 140... 300 mW for the standard version, latching relays with 1 coil 100 mW. The FX2 relay is available as through hole type and capable to switch loads up to 60 W/62,5 VA. Dielectric strength fulfills the Telcordia requirements according GR 1089 (2,5 kV – 2 / 10 µs) and FCC part 68 (1,5 kV – 10 / 160 µs). The FX2 relay is tested according CECC/IECQ and certified in accordance with IEC/EN 60950 and UL 60950.
Dimensions approx. 15 x 7,5 mm board space and 10,7 mm height.

FT2 / FU2 Relays

3rd generation non polarized, non latching 2 c/o telecom relay with bifurcated contacts. Nominal voltage range from 3 ... 48 V, coil power consumption 200 ... 300 mW. Most sensitive 48 V relay. Available as through hole and surface mount type. Dielectric strength fulfills the Telcordia requirements according GR 1089 (2,5 kV – 2 / 10 µs) and FCC part 68 (1,5 kV – 10 / 160 µs). The FT2/FU2 relay is tested according CECC/IECQ and certified in accordance with IEC/EN 60950 and UL 60950.
Dimensions approx. 15 x 7,5 mm board space and 10 mm height.

FP2 Relays

3rd generation polarized 2 c/o telecom relay with bifurcated contacts, available as non latching or latching relay with 1 or 2 coils. Nominal voltage range from 3 ... 48 V, coil power consumption of 80 ... 260 mW for the high sensitive version, 140... 300 mW for the standard version, latching relays with 1 coil 100 mW.. The FP2 Relay is available as through hole type and capable to switch loads up to 60 W/62,5 VA. Dielectric strength fulfills FCC part 68 (1,5 kV – 10 / 160 µs). The FP2 is tested according CECC/IECQ approved.
Dimensions approx. 14 x 9 mm board space and 5 mm height.

MT2

2nd generation non polarized, non latching 2 c/o telecom and signal relay with bifurcated contacts. Nominal voltage range from 3 ... 48 V, coil power consumption 150/200/300/400 and 550 mW. Dielectric strength fulfills the requirements according FCC part 68 (1,5 kV – 10 / 160 µs).
Dimensions approx. 20 x 10 mm board space and 11 mm height.

D2n Relays

2nd generation non polarized 2 c/o relay for telecom and various other applications. Nominal voltage range from 3 ... 48 V, coil power consumption from 150 .... 500 mW. The D2n relay is capable to switch currents up to 3 A. Dielectric strength fulfills the requirements according FCC part 68 (1,5 kV – 10 / 160 µs). Dimensions approx. 20 x10 mm board space and 11 mm height.

P1 Relays

Extremely sensitive, polarized 1 c/o relay with bifurcated contacts for a wide range of applications, available as non latching or latching relay with 1 or 2 coils. Nominal voltage range from 3 ... 24 V, coil power consumption 65 mW, latching relays with 1 coil 30 mW. The P1 relay is available as through hole or surface mount type and capable to switch currents up to 1 A. Dielectric strength fulfills the requirements according FCC part 68 (1,5 kV – 10 / 160 µs). Dimensions approx. 13 x 7,6 mm board space and 7 mm height for THT or 8 mm height for SMT version.

W11 Relays

Low cost, non polarized 1 c/o relay for various applications. Nominal voltage range from 3 ... 24 V, coil power consumption 450 mW, sensitive versions 200 mW. The W11 relay is capable to switch currents up to 3 A. Dielectric strength 1000 Vrms.
Dimensions approx. 15,6 x 10,6 mm board space and 11,5 mm height.

Reed Relays

High sensitive, non polarized relay for telecom and various other applications, available with 1 n/o, 2 n/o or 1c/o contacts. Nominal voltage range from 5 ... 24 V, coil power consumption 50...280 mW for 1 n/o and 125 ... 280 mW for 2 n/o or 1 c/o versions. Reedrelays are available in DIP or SIL housing and capable to switch currents up to 0,5 A. Integrated diode and/or electrostatic shield optional. Dielectric strength 1500 Vdc. Dimensions approx. 19,3 x 7 mm board space and 5 ... 7,5 mm height for DIP or 19,8 x 5 mm board space and 7,8 mm height for SIL version.

Cradle Relays

Extremely reliable and mature relay family of 1st generation for various signal switching applications. Available as non polarized, polarized / latching and relay with AC coil. The benefit is the possibility of combining various contact sets from 1 up to 6 poles, single and bifurcated contacts, different contact materials with a coil voltage range from 1,5 Vdc to 220 Vac. Cradle relays are available as dust protected and hermetically sealed versions, with plug in or solder terminals and are capable to switch currents up to 5 A. Forcibly guided (linked) contact sets optional. Dielectric strength 500 Vrms. Dimensions from approx. 19 x 24 to 19x35 mm board space and 30 mm height.

Other Relays

We offer a variety of different relay families for maintenance and replacement purposes. These relays are up to 60 years old now, such as Card Relay SN (V23030 series), Small General Purpose Relay (V23006 series), Small Polarized Relay (V23063 ... V23067 and V23163 ... V23167 series). Accessories like sockets, hold down springs, etc. optional.

High Frequency Relays

HF3 / HF3S / HF6 series RF relays offering excellent RF characteristics in a small package. All HF series relays are suitable for SMD soldering processes. Available as non latching or latching versions with 1 or 2 coils and a nominal coil voltage range from 3 … 24 V, a coil power consumption of 140 mW or 70 mW (single coil latching types).

HF3: Low cost RF relay suitable up to 3 GHz. Impedance 50 and 75 Ohm. 50 W hot switching and 50 W RF power carry capability.
Dimensions 14.6 x 7.3 x 10.3 mm.

HF3S: High performance, high power RF relay suitable up to 3 GHz, 50 W hot switching and 150 W RF power carry capability.
Dimensions 15 x 7.6 x 10.6 mm.

HF6: High performance, high power RF relay suitable up to 6 GHz, 50 W hot switching and 50 W RF power carry capability.
Dimensions 15 x 7.6 x 10.6 mm.

Tyco Electronics Logistics AG
Werk Axicom Au
Seestrasse 295
CH-8804 Au-Wädenswil / Switzerland
Phone +41 44 782 91 11
Fax +41 44 782 90 00
E-mail: axicom@tycoelectronics.com

Tyco Electronics
Paulsternstrasse 26
D-13629 Berlin / Germany
Phone +49 30 386 38573
Fax +49 30 386 38575
E-mail: axicom@tycoelectronics.com

Tyco Electronics EC Trutnov s.r.o.
Komenského 821
CZ-541 01 Trutnov / Czech Republic
E-mail: axicom@tycoelectronics.com

AXICOM

Telecom-, Signal and RF Relays

Tyco Electronics Corporation
POB 3608,
Harrisburg, PA 17105, USA
Phone +1 800-522-6752

Tyco Electronics

Our commitment. Your advantage.