Battery Holder 3 “AA” Mini-Snaps

12BH331B

Date Last Revised: 10-20-05

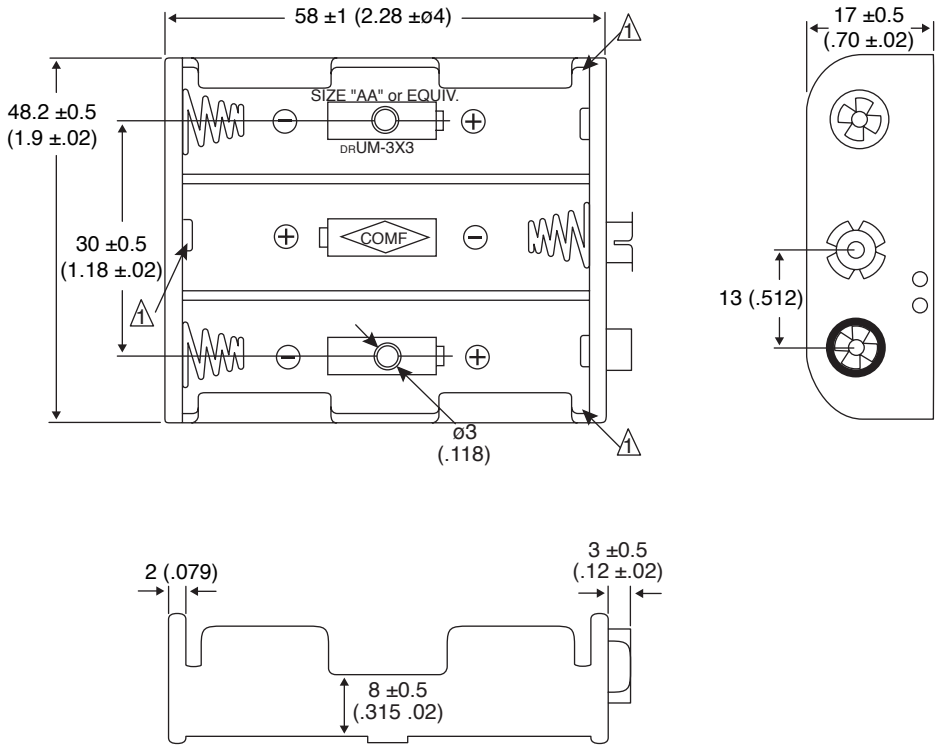

Dimensions: mm (In.)

SPECIFICATIONS	
Material:	P.P. Resin, Black Color
Terminal:	4 Prong Snap
Spring:	0.7mm 65C Spring Wire

Available from Mouser Electronics
1-800-346-6873
www.mouser.com

EPD-200044

Specifications are subject to change without notice. No liability or warranty implied by this information. Environmental compliance based on producer documentation.

Downloaded from Elcodis.com electronic components distributor