KYCON Inc. 1810 Little Orchard Street, San Jose, CA 95125 (408) 494-0330

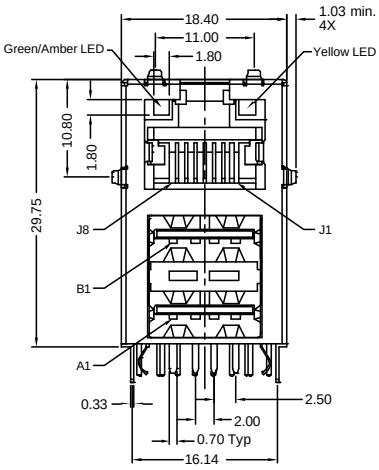

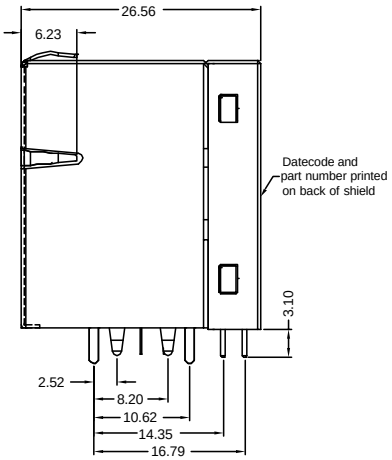

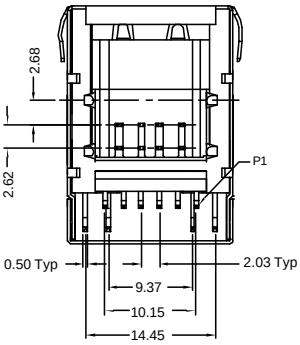

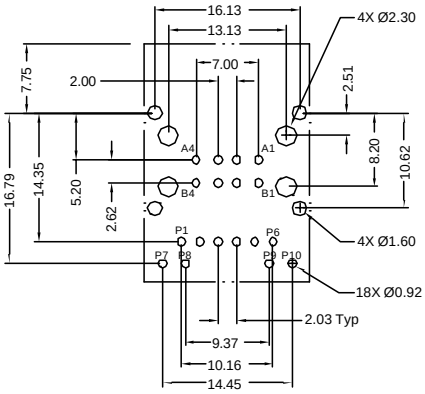

RECOMMENDED PCB LAYOUT
(COMPONENT SIDE)

Isolation: 1500 Vrms LEDs: Vf=2.1V Typ. @ 20mA

Schematic

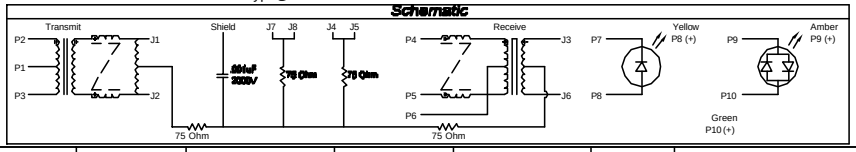

Material and Finish (GSP)

Body: PBT, glass filled
UL94V-0 rated
color: black

Shield: 0.30mm thick
Copper alloy,
Nickel plated

Contact: Phosphor Bronze
Nickel underplate on
entire contact, tin-lead
on termination end,
gold flash on contact
area

Material and Finish (USB)

Body: PBT, glass filled
UL94V-0 rated
color: black

Shield: 0.30mm thick
Copper alloy,
Tin plated

Electrical Performance (10/100 Base-T)

Category 5 100MHz Bandwidth Performance

Attenuation @ 100MHz -1dB Max.

Performance meets near end crosstalk (NEXT)
Requirements of -35dB @ 100MHz per
EIA/TIA 568A in applications where UL
Approved Category 5 cable (GA27-3773-1)
is used

Mechanical Specifications (USB)

Mating Force: 3.6kg Max.

Unmating Force: 1.0kg Min.

Durability Rating:
1500 mating cycles min.

Electrical Specifications (RJ45)

Insulation Resistance:
500 Megohms Min.

Dielectric Withstanding Voltage:
1000 Volts RMS,
for 1 minute

Contact Resistance:
20 milliohms Max.

Contact Current Rating
1.5 Amps

Durability Rating:
750 mating cycles min.

Electrical Specifications (USB)

Rated Voltage:
30V AC (rms)

Contact Current Rating:
1A Max.

Contact Resistance:
30 milliohms Max.

Insulation Resistance:
1000 Megohms Min.

Dielectric Withstanding Voltage:
750V AC

Electrical Performance of 10/100 Base-T @ 25°C

OCL (µH Min.)	Insertion Loss (dB Max.)	Return Loss (dB Min.)			CMRR (dB Min.)	CMD (dB Min.)	Turns Ratio (± 5 %)	Crosstalk (dB Min.)
@ 100 KHz, 100m Vrms 8 mA DC Bias	1-100 MHz	1-30 MHz	@ 60 MHz	@80 MHz	100 KHz-100 MHz	100 KHz-100 MHz		1-100 MHz
350	-1	-20	-18	-12	-30	-30	Xmit/Rcv 1CT:1/1CT:1CT	Xmit - Rcv -35

LR78160

Tolerances
X.X ± 0.25
X.XX ± 0.15
Unless Stated

REVISION	DATE	DESCRIPTION	DRAWN BY	REV CHECK BY	UNITS
E1	1/15/04	Ref ECO 04-002	K. Wallace	H. MA	mm
E2	09/21/04	ECO #04-054	REVISED BY	REV CHECK DATE	DATE
F1	01/31/06	ECO #06-007	R. Aguirre	2/1/06	12/23/99

GSP-B-S2-GG-9100

Magnetic Filtered RJ45

over 2 Stacked USB A-type Jacks

KYCON

Downloaded from Elcodis.com electronic components distributor