REV.	DATE	ECR NO.	DESCRIPTION
NC	12/12/05	–	INITIAL RELEASE
A	06/18/08	–	CORRECT PART NUMBER CALLOUT ITEM NO.2

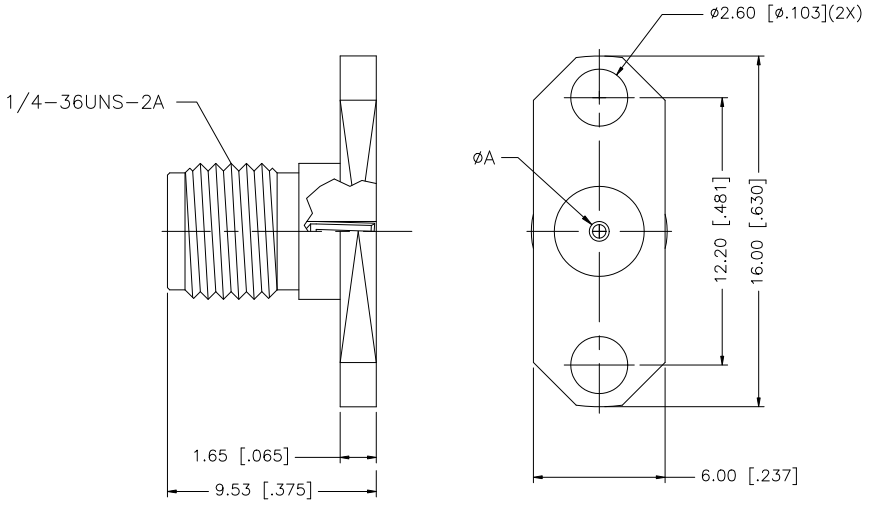

ITEM NO.	DRAWING NO.	A
1.	132163	.30 [.012”]
2.	132163–10	.38 [.015”]
3.	132163–11	.46 [.018”]
4.	132163–12	.91 [.036”]

	DESCRIPTION	MATERIAL	FINISH	QTY
8				
7				
6				
5				
4				
3	CONTACT PIN	BER. COPPER	GOLD	1
2	INSULATOR	TEFLON	NATURAL	1
1	BODY	BRASS	GOLD	1

UNLESS OTHERWISE SPECIFIED DIMENSIONS ARE IN MILLIMETERS. DIMENSIONS IN [ ] ARE IN INCHES AND FOR CUSTOMER REFERANCE ONLY.

UNLESS OTHERWISE SPECIFIED TOLERANCES FOR MILLIMETERS ARE:
0.5 – 8mm ± 0.20mm
8 – 30mm ± 0.40mm
30 – 120mm ± 0.50mm

UNLESS OTHERWISE SPECIFIED TOLERANCES FOR INCHES ARE:
.020 – .315 = ± 0.007”
.315 – 1.180 = ± 0.015”
1.180 – 4.724 = ± 0.020”

DO NOT SCALE DRAWING

APPROVALS		DATE
DRAWN	G.R.S.	06/18/08
CHECKED		
ISSUED		
SHEET	1 OF 1	
CAD FILE	C:/132/132163.DWG	

Amphenol Connex

PART DESCRIPTION: SMA PANEL RECEPTACLE JACK

PART NO. 132163

DWG. NO. 132163.DWG | REV. A | SIZE A | SCALE NA

Downloaded from Elcodis.com electronic components distributor