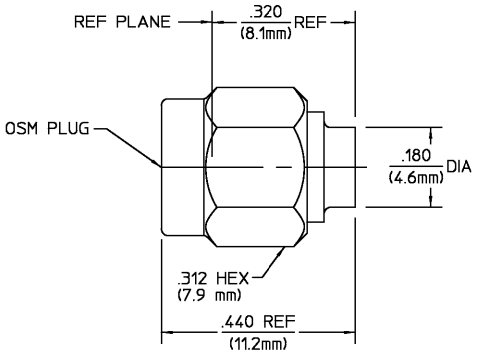

DESIGNED FOR USE WITH .141 DIA S.R. CABLE	
CABLE ENTRY DIAMETER MINIMUM	
CONTACT	.039
HOUSING	.144

REVISIONS

REV	DESCRIPTION	DATE	APPROVED
01_2	SEE ECN 80-0084	PG 1-29-80	TS 1/29/80
01_3	MINOR CHANGE PER ECN 85-0340	JMP 5-7-85	R.S. 5-7-85
01_4	REDRAWN ON CAD PER ECN 88-0678	BB 9-3-91	1/23/93

ELECTRICAL	MECHANICAL	ENVIRONMENTAL
Nominal Impedance (Ohms) 50	Interface Dimensions MIL-STD-348A, Fig. 310.1	Temperature Rating -65°C to 125°C
Frequency Range (GHz) DC to 18.0	Recommended Mating Torque 7 to 10 in-LBs	Vibration MIL-STD-202, Method 204, Condition D
Volt Rating (VRMS MAX) @ Sea Level 500	Mating Characteristics: Insertion (MAX Lbs) N/A	Shock MIL-STD-202, Method 213, Condition I
VSWR 1.05 + .008f(GHz)	Withdrawal (MIN Oz) N/A	Thermal Shock MIL-STD-202, Method 107, Condition B, Except High Temp 115°C
Insertion Loss (dB MAX) .03 $\sqrt{f(GHz)}$	Force to Engage and Disengage (In/Lbs MAX) 2.0	Moisture Resistance MIL-STD-202, Method 106
RF Leakage (dB MIN) -(90-f(GHz)	Center Contact Captivation Axial (Lbs) N/A	Corrosion - MIL-STD-202, Method 101, Condition B, 5% salt spray
Corona, 70,000 Ft (VRMS MIN) 375	Radial (In/Oz) N/A	
Dielectric Withstanding Voltage (VRMS MIN) @ Sea Level 1500	Cable Retention Axial Force (Lbs) 60	
Contact Resistance (Milliohms MAX) Center Contact 3.0	Torque (In/Oz) 55	
Outer Contact 2.0	Weight (Grams) T.B.D.	
Cable to Housing 0.5		
RF High Potential @ Sea Level (VRMS MIN @ 5 MHz) 1000		
I.R.(Megohms MIN) 5,000		

COMPONENT	MATERIAL	FINISH
HOUSING MOUNTING NUT	STAINLESS STEEL PER ASTM-A484 AND ASTM-A582, TYPE 303	GOLD PLATE PER MIL-G-45204
DIELECTRIC	PTFE FLUOROCARBON PER ASTM-D-1457	N/A
CENTER CONTACT	BERYLLIUM COPPER PER ASTM-B-196 OR ASTM-B-197, ALLOY C17300, CONDITION H	GOLD PLATE PER MIL-G-45204
RETAINING RING	BERYLLIUM COPPER PER ASTM-B-194, ALLOY C17200, CONDITION H	N/A
GASKET	SILICONE RUBBER PER ZZ-R-765	N/A

UNLESS OTHERWISE SPECIFIED DIMENSIONS ARE IN INCHES
TOLERANCE ON
FRAC. ± 1/64 DEC. ±.005 ANGLES ± 1°

DRAWN BY JPD DATE 7/31/76
CHECKED BY RNF 9/7/76
APP'D BY RNF 9/13/76

AMP

AMP Incorporated
140 Fourth Avenue
Waltham, MA 02451-7599

These drawings and specifications are the property of AMP Incorporated and shall not be reproduced or copied or used in whole or in part as the basis for the manufacture or sale of items(s) without written permission.

USE ASS'Y PROCEDURE
NO. A.P. 408-04764 (20-006)

TITLE OSM STRAIGHT CABLE PLUG DIRECT SOLDER ATTACHMENT

SIZE	CODE IDENT NO.		REV
B	26805	2001-5003-00	01_4

SCALE 5:1 SHEET 1 OF 1

CUSTOMER DRAWING

AMP PART # 1050524-1
SHEET 1 OF 1 REV A

Downloaded from Elcodis.com electronic components distributor