REV.	DATE	DESCRIPTION
A	11/21/03	UPDATE DRAWING FORMAT
B	04/14/04	MODIFY CABLE DESCRIPTION

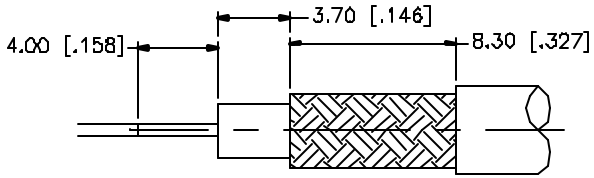

RECOMMENDED
CABLE STRIPPING DIM'S

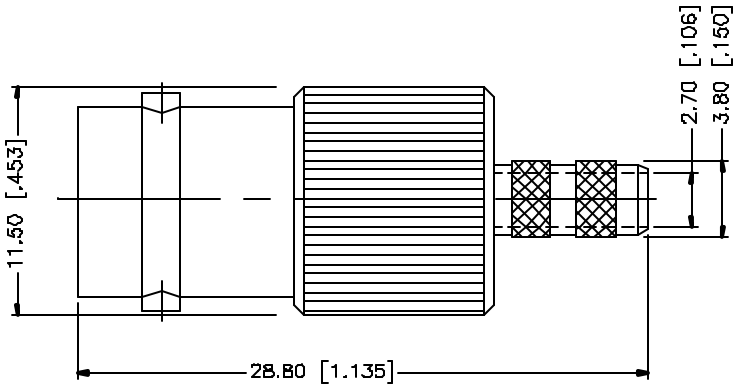

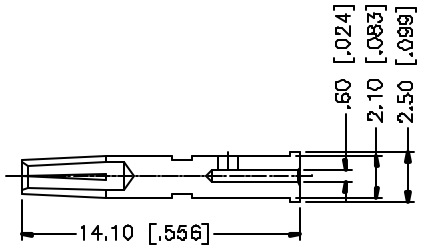

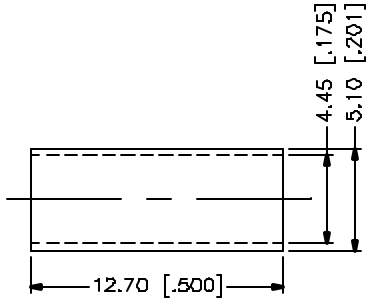

NOTE:

1. CRIMPED FERRULE
   HEX CRIMP SIZE .178"
2. CRIMPED CONTACT PIN
   HEX CRIMP SIZE .068"

	DESCRIPTION	MATERIAL	FINISH	QTY
8				
7				
6				
5				
4	FERRULE	COPPER	NICKEL	1
3	CONTACT PIN	PHOS. BRONZE	GOLD	1
2	INSULATOR	DELRIN	NATURAL	1
1	BODY	BRASS	NICKEL	1

UNLESS OTHERWISE SPECIFIED DIMENSIONS ARE IN MILLIMETERS. DIMENSIONS IN [ ] ARE IN INCHES AND FOR CUSTOMER REFERENCE ONLY.

UNLESS OTHERWISE SPECIFIED TOLERANCES FOR MILLIMETERS ARE:
0.5 – 6mm ± 0.20mm
6 – 30mm ± 0.40mm
30 – 120mm ± 0.50mm

UNLESS OTHERWISE SPECIFIED TOLERANCES FOR INCHES ARE:
.020 – .315 = ± 0.007"
.315 – 1.180 = ± 0.015"
1.180 – 4.724 = ± 0.020"

DO NOT SCALE DRAWING

APPROVALS		DATE
DRAWN	G.R.S.	04/14/04
CHECKED		
ISSUED		
SHEET	1 OF 1	
CAD FILE	C:/112/112559.DWG	

Amphenol Connex

PART DESCRIPTION
BNC CRIMP JACK
(FOR BELDEN 8218 CABLE – 75 ohms)

PART NO. 112559

DWG. NO.	REV.	SIZE	SCALE
112559.DWG	B	A	NA

Downloaded from Elcodis.com electronic components distributor