REV.	DATE	DESCRIPTION
NC	08/01/02	INITIAL RELEASE

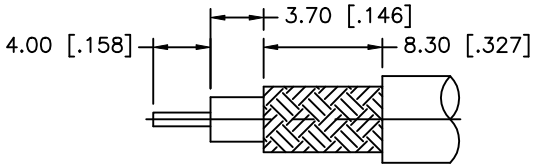

RECOMMENDED
CABLE STRIPPING DIM'S

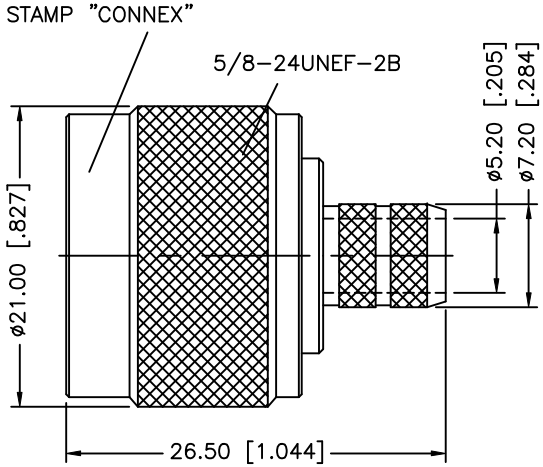

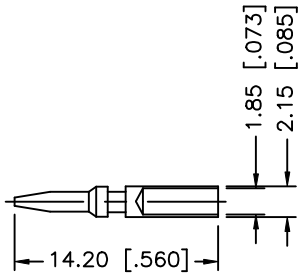

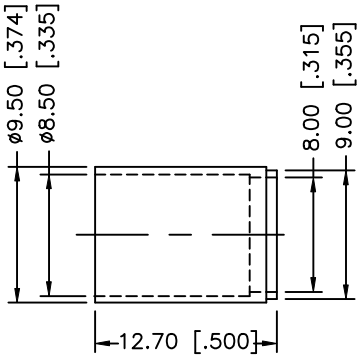

CRIMP NOTES:

1. CRIMPED FERRULE
   HEX CRIMP SIZE .324"
2. CRIMPED CONTACT PIN
   HEX CRIMP SIZE .068"

	DESCRIPTION	MATERIAL	FINISH
8			
7			
6			
5			
4	FERRULE	BRASS	NICKEL
3	CONTACT PIN	BRASS	GOLD
2	INSULATOR	TEFLON	NATURAL
1	BODY	BRASS	NICKEL

UNLESS OTHERWISE SPECIFIED DIMENSIONS ARE IN MILLIMETERS

DIMENSIONS IN [ ] ARE IN INCHES FOR CUSTOMER REFERANCE ONLY

UNLESS OTHERWISE SPECIFIED TOLERANCES FOR INCHES ARE:

.XXX = ± 0.005"
.XX = ± 0.010"
.X = ± 0.020"

DO NOT SCALE DRAWING

APPROVALS		DATE
DRAWN	G.R.S.	08/01/02
CHECKED		
ISSUED		

Amphenol - Connex
CONNECTOR CORPORATION

TITLE: N CRIMP PLUG FOR LMR 300 CABLE

SIZE	FSCM NO.	DWG. NO.	REV.
A	99001	172304.DWG	NC

SCALE	PART NO.	SHEET
NA	172304	1 OF 1

Downloaded from Elcodis.com electronic components distributor