DESIGNED FOR USE WITH .085 DIA S.R. CABLE	
CABLE ENTRY DIAMETER MINIMUM	
CONTACT	.021
HOUSING	.089

REVISIONS

REV	DESCRIPTION	DATE	APPROVED
01_4	REVISED	04/29/94	JRD

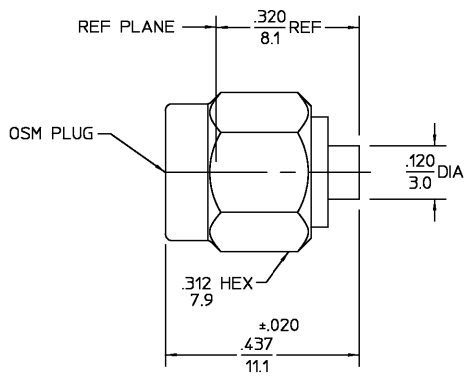

COMPONENT	MATERIAL	FINISH
HOUSING COUPLING NUT	STAINLESS STEEL PER ASTM-A484 AND ASTM-A582, TYPE 303	GOLD PLATE PER MIL-G-45204
DIELECTRIC	TFE FLUOROCARBON PER ASTM-D-1457	N/A
CENTER CONTACT	BERYLLIUM COPPER PER ASTM B 196, ALLOY C17300, CONDITION H	GOLD PLATE PER MIL-G-45204
RETAINING RING	BERYLLIUM COPPER PER ASTM B 194, ALLOY C17200, CONDITION H	N/A
GASKET	SILICONE RUBBER PER ZZ-R-765	N/A

ELECTRICAL	MECHANICAL	ENVIRONMENTAL
Nominal Impedance (Ohms) 50	Interface Dimensions MIL-STD-348, Fig. 310.1	Temperature Rating -65°C to 105°C
Frequency Range (GHz) DC to 18.0	Recommended Mating Torque 7 to 10 in-LBs	Vibration MIL-STD-202, Method 204, Condition D
Volt Rating (VRMS MAX) @ Sea Level 335	Mating Characteristics: Insertion (MAX Lbs) N/A	Shock MIL-STD-202, Method 213, Condition I
VSWR 1.05 + .005f(GHz)	Withdrawal (MIN Oz) N/A	Thermal Shock MIL-STD-202, Method 107, Condition B, Except High Temp 115°C
Insertion Loss (dB MAX) .03 $\sqrt{f(GHz)}$	Force to Engage and Disengage (In/Lbs MAX) 2.0	Moisture Resistance MIL-STD-202, Method 106
RF Leakage (dB MIN) -(90-f(GHz)	Center Contact Captivation Axial (Lbs) N/A	Corrosion - MIL-STD-202, Method 101, Condition B, 5% salt spray
Corona, 70,000 Ft (VRMS MIN) 250	Radial (In/Oz) N/A	
Dielectric Withstanding Voltage (VRMS MIN) @ Sea Level 1000	Cable Retention Axial Force (Lbs) 30	
Contact Resistance (Milliohms MAX) Center Contact 2.0	Torque (In/Oz) 16	
Outer Contact 2.0	Weight (Grams) T.B.D.	
Cable to Housing 0.5		
RF High Potential @ Sea Level (VRMS MIN @ 5 MHz) 670		
I.R.(Megohms MIN) 10,000		

.XXX = in
XX.X = mm

UNLESS OTHERWISE SPECIFIED DIMENSIONS ARE IN INCHES
TOLERANCE ON
FRAC. ± 1/64 DEC. ±.005 ANGLES ± 1°

DRAWN BY DRJ DATE 11/1/76
CHECKED BY
APP'D BY RMF

AMP

AMP Incorporated
140 Fourth Avenue
Waltham, MA 02451-7599

These drawings and specifications are the property of Omni Spectra Incorporated and shall not be reproduced or copied or used in whole or in part as the basis for the manufacture or sale of items(s) without written permission.

USE ASS'Y PROCEDURE

NO. A.P. 408-04765 (20-007)

TITLE OSM STRAIGHT CABLE PLUG DIRECT SOLDER ATTACHMENT

SIZE	CODE IDENT NO.		REV
B	26805	2001-7985-00	01_4

SCALE 5:1 SHEET 1 OF 1

CUSTOMER DRAWING

AMP PART # 1050769-1
SHEET 1 OF 1 REV A

Downloaded from Elcodis.com electronic components distributor