MICRO SWITCH
FREEPORT ILLINOIS, U.S.A
A DIVISION OF HONEYWELL
FED. MFG. CODE 91929

SWITCH–BASIC

CATALOG LISTING
BZ-2RD-PC2

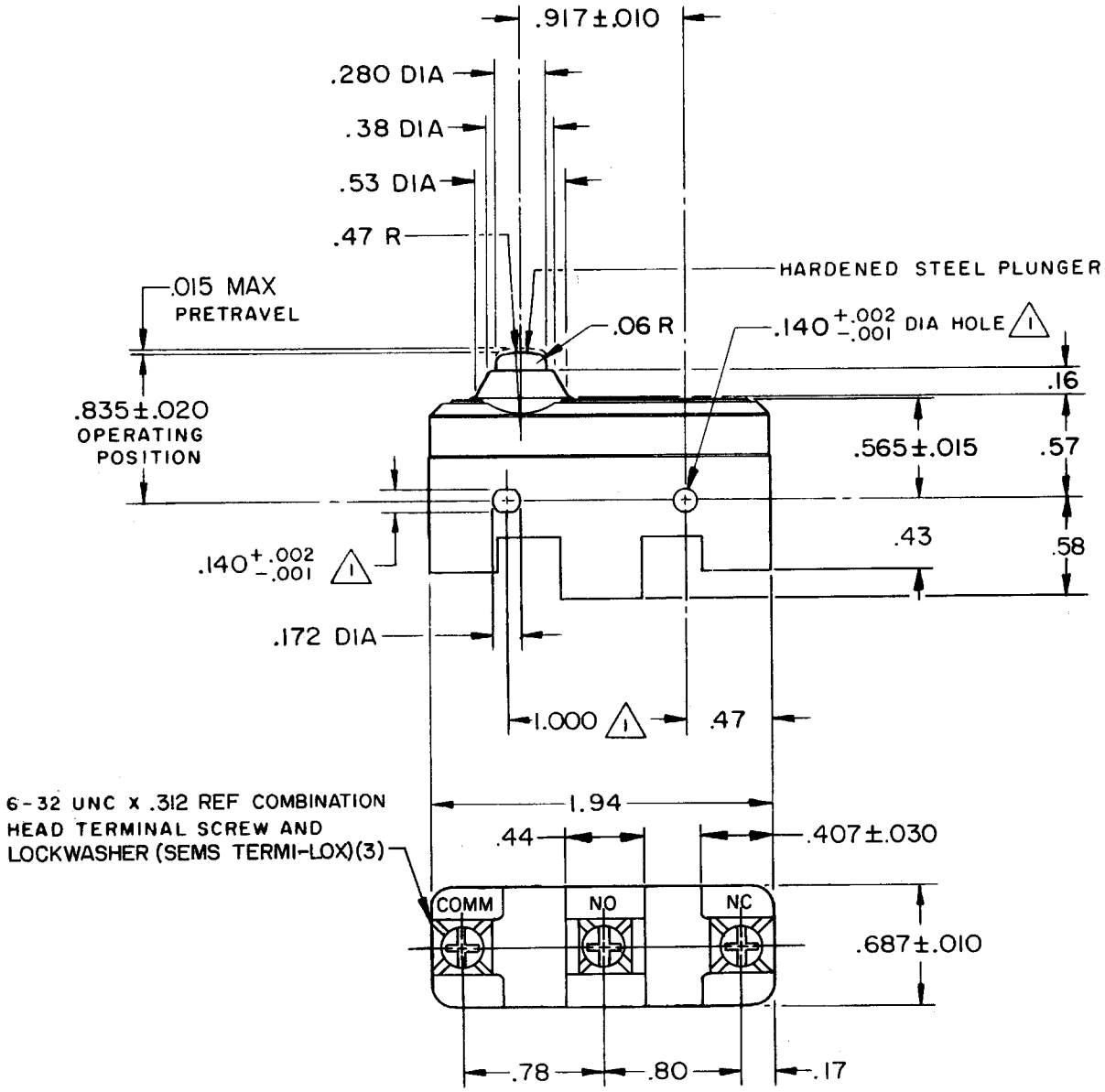

NOTE
1 MOUNTING HOLES WILL ACCEPT PINS OR SCREWS OF .139 MAX DIA ON 1.000±.002 CENTERS

THIS DRAWING COVERS A PROPRIETARY ITEM AND IS THE PROPERTY OF MICRO SWITCH, A DIVISION OF HONEYWELL. THIS DRAWING IS NOT TO BE COPIED OR USED WITHOUT THE APPROVAL OF MICRO SWITCH.

CHARACTERISTICS

OPERATING FORCE——————9-13 OZ
RELEASE FORCE——————4 OZ MIN
DIFFERENTIAL TRAVEL———.0004–.0020
OVERTRAVEL——————.060 MIN

ELECTRICAL DATA

CONTACT ARRANGEMENT
S P D T

15A-125, 250 OR 480 VAC, 2A-600 VAC
1/8 HP-125 VAC; 1/4 HP-250 VAC
1/2A-125 VDC; 1/4A-250 VDC
CODE L74
L288
L299
L306
16A 250V ~ T85 5E4

SCALE FULL
DO NOT SCALE PRINT

UNLESS OTHERWISE NOTED
DIMENSIONS ARE IN INCHES
TOLERANCES ARE

ONE PLACE	(.0)	±.030
TWO PLACE	(.00)	±.015
THREE PLACE	(.000)	±.005
ANGLES		±

WEIGHT .064 LB

M BZ-2RD-PC2 PAGE 1 OF 1
DRAWING NUMBER
ISSUE 8
REPLACES X48926-BZ
RELEASE NO. PR-3904-T
CHECK
CHECK 15 MAR '74
CHECK LSD
CHECK 74
DRAWN K P K 12 MAR 74
FORMTEK FO-52848

REVISIONS

A	PR-3904	K P K 14 MAR 74
B	C038927	C E B 25 JULY 77
C	C054223	CJH 17 NOV 83
D	CO-67851-A	BAB. 15 AUG 90
E	CO-77592	DAW 15 AUG 94
F	C093346	DLT 1 SEP 98

Downloaded from Elcodis.com electronic components distributor