Low Voltage DC Power Jack PCB Mount

163-510DJ-EX

KOBICONN

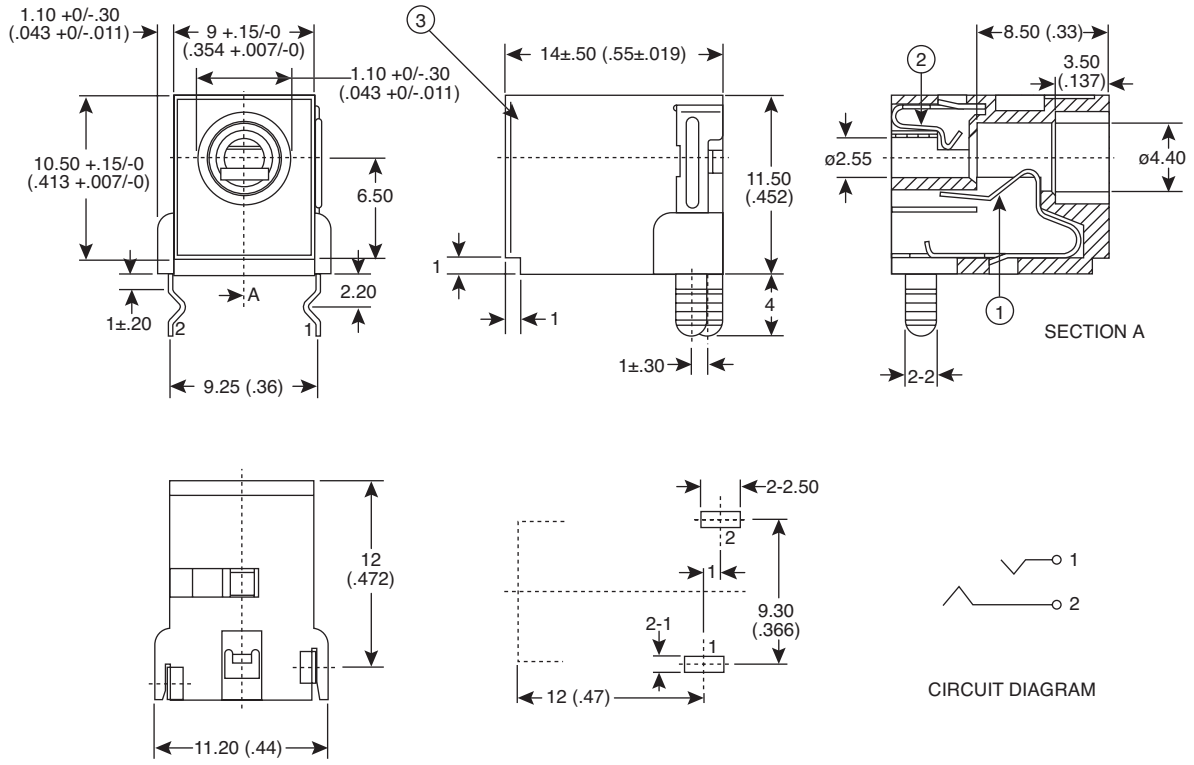

Dimensions: mm (IN.)

SPECIFICATIONS	
Mates With:	171-MP214-E
Voltage Classification:	4
Rating:	13.5 VDC, 2A
RoHS Compliant by Exemption	

Tolerance
x <= 5 = ±0.10
x > 5 = ±0.30
Angular = ± ---

No.	Part Name
1	Earth Terminal
2	Tip Spring
3	Jack Casing

Date Last Revised: 1-19-06

Available from Mouser Electronics
1-800-346-6873
www.mouser.com

KC- 300954

Low Voltage DC Power Jack PCB Mount

163-510DJ-EX

Specifications are subject to change without notice. No liability or warranty implied by this information. Environmental compliance based on producer documentation.

Downloaded from Elcodis.com electronic components distributor