APEX 150
Coupling connectors

14 way sealed coupling housings

Dimensional characteristics

Notes :

Female connector

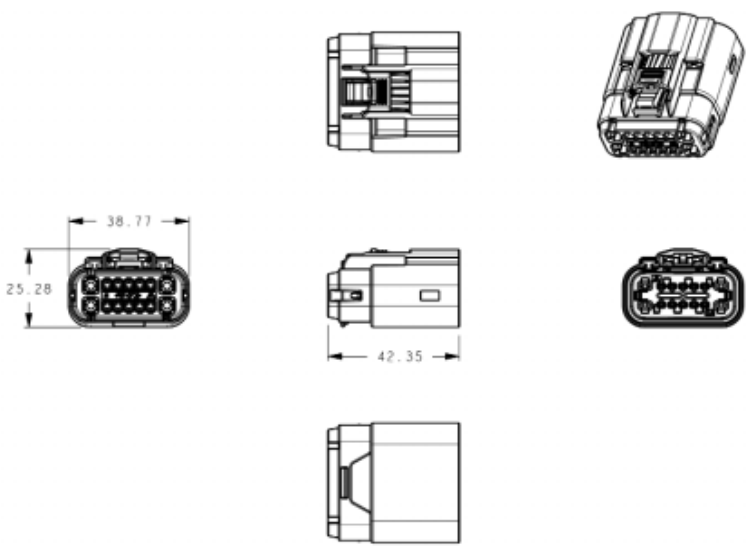

Male connector

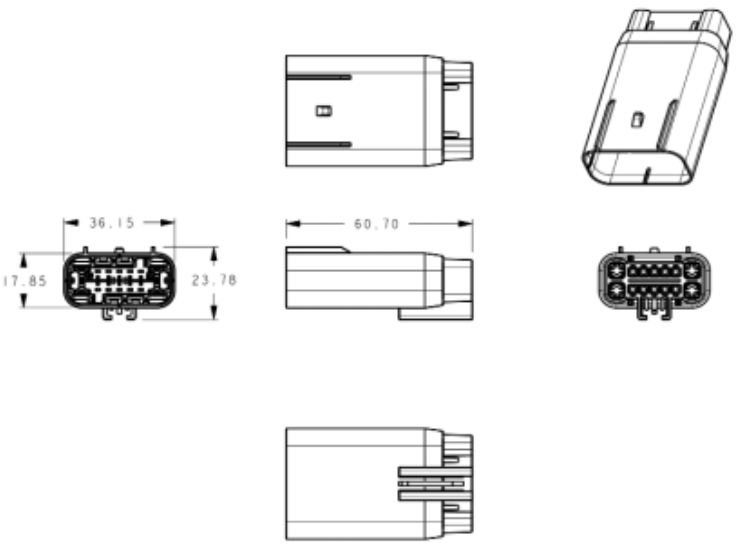

Rev 07/05

Downloaded from Elcodis.com electronic components distributor