PCB Dual Phono Jacks

161-4218, 161-4220

KOBICONN

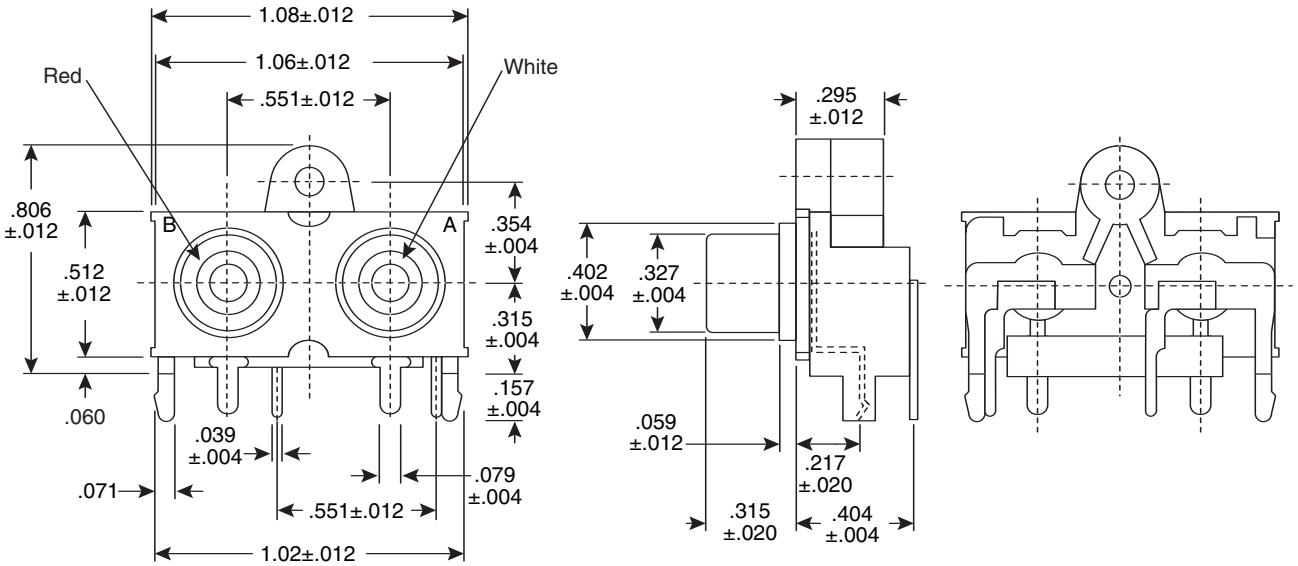

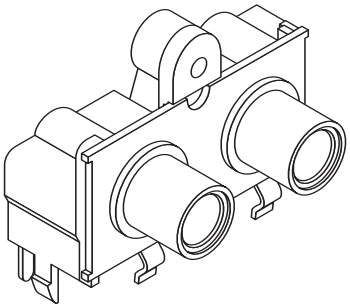

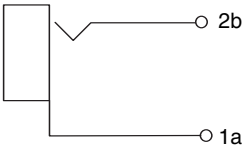

Jack Circuit

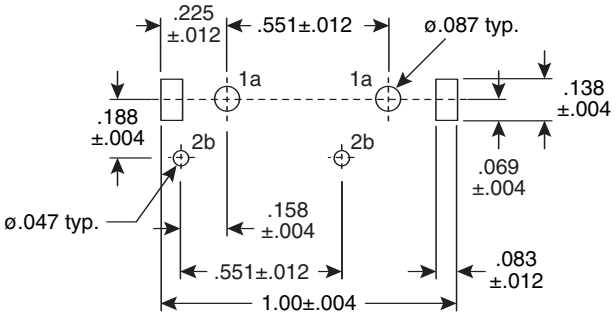

PCB Layout

Dimensions: In.

MOUSER STOCK NO.	Finish
161-4218	Nickel Plated
161-4220	Gold Plated

SPECIFICATIONS

Type:	PCB Dual Phono Horizontal Mount
Rated Voltage:	DC/AC 34V
Rated Current:	DC/AC 2A
Temperature Range:	-25° ~ +70°C
Humidity Range:	85% RH max.
Insulator, Base, Cover:	ABS
Earth Terminal:	Nickel Plated Brass
Terminals:	Tin Plated Brass
Insulator Color:	Red / White

Date Last Revised: 4-19-05

Available from Mouser Electronics
1-800-346-6873
www.mouser.com

KC-300563

PCB Dual Phono Jacks

161-4218, 161-4220

Specifications are subject to change without notice. No liability or warranty implied by this information. Environmental compliance based on producer documentation.

Downloaded from Elcodis.com electronic components distributor