MICRO SWITCH
a Honeywell Division
FED. MFG. CODE 91929

SWITCH – ENCLOSED

CATALOG LISTING
1EN1–5

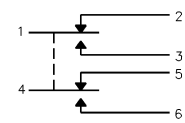

CIRCUIT DIAGRAM

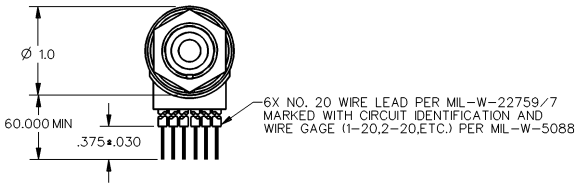

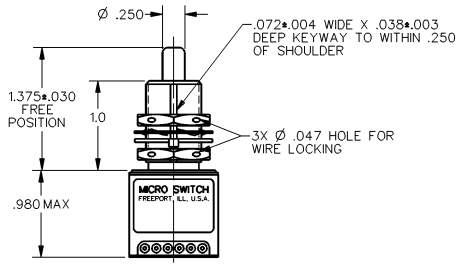

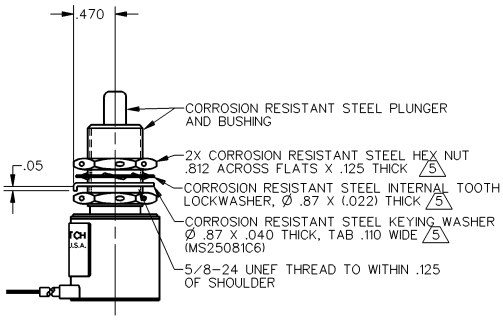

NOTES
1 – CORROSION RESISTANT STEEL ENCLOSURE
2 – SWITCH SEALED PER MIL–S–8805 SYMBOL 4
3 – COINCIDENCE OF OPERATING AND RELEASING POINTS:
.010 OF PLUNGER TRAVEL
4 – CIRCUIT DIAGRAM, CATALOG LISTING AND DATE CODE
ARE SHOWN ON NAMEPLATE
5 HARDWARE MAY BE PACKAGED UNASSEMBLED PER MIL–S–8805

THIS DRAWING COVERS A PROPRIETARY ITEM AND IS THE PROPERTY OF MICRO SWITCH. A DIVISION OF HONEYWELL. THIS DRAWING IS NOT TO BE COPIED OR USED WITHOUT THE APPROVAL OF MICRO SWITCH

THIRD ANGLE PROJECTION

SCALE FULL

DO NOT SCALE PRINT

CHARACTERISTICS

OPERATING FORCE	6–12 LB
FULL OVERTRAVEL FORCE	30 LB MAX
RELEASE FORCE	4 LB MIN
PRETRAVEL	.040 MAX
DIFFERENTIAL TRAVEL	.020 MAX
OVERTRAVEL	.250 MIN

ELECTRICAL DATA

CONTACT ARRANGEMENT
2X S P D T

LOAD	28 VDC SEA LEVEL	28 VDC 50,000 FT.
RES	4	4
IND	2	2
MOTOR	4	

UNLESS OTHERWISE SPECIFIED TOLERANCES ARE

ONE PLACE	(.0)	±.030
TWO PLACE	(.00)	±.015
THREE PLACE	(.000)	±.005
ANGLES		±

WEIGHT 7 OZ MAX

ANSI Y14.5M–1982 APPLIES

CATALOG LISTING 1EN1–5
REPLACES
RELEASE NO. PR–1745
ISSUE 15
M
CHECK
REVISIONS
A CO 77504A LJF 15 MAR 94
CHECK
CHECK
DDM/CAD
DRAWN L J F 15 MAR 94

Downloaded from Elcodis.com electronic components distributor