Date: 8/11/04 **Ref.#:** TW-100022

ALPHA

12mm Potentiometers

RV122-20-15F Series

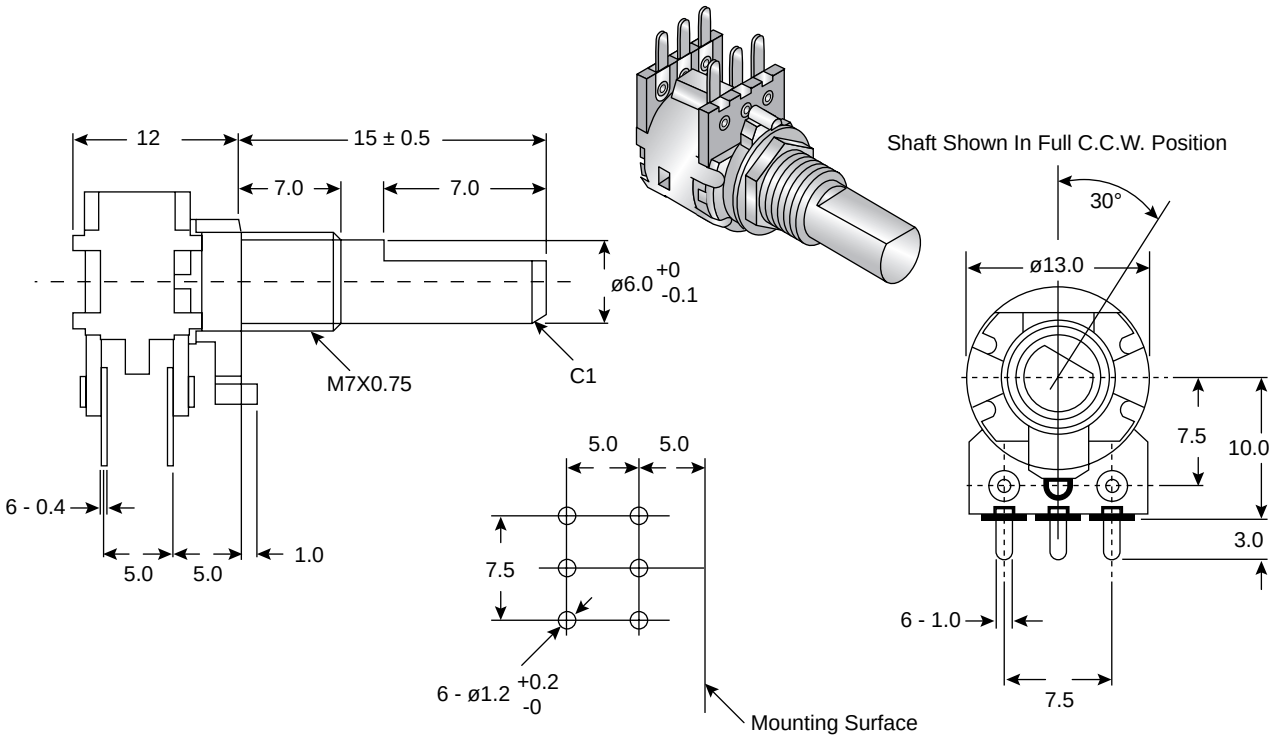

P.C.B. Mounting Hole Detail

Dimensions: mm

Specifications:

- Rotation Angle: degree 300 ± 5˚
- Rated Wattage: Linear-0.08
  Audio-0.04
- Max. Working Voltage: Linear-150
  Audio-100
- Flat/"D" Shaft: 60mm diameter
- Termination: solder lugs
- Rotations: life 15,000 cycles

Tol. Unless Otherwise Stated		
Less Than	10	±0.3
Above	10-30	±0.5
Above	30~100	±1.0
Above	- - -	±5˚

Suffix	Value	Taper
A1K	1K	Audio
A5K	5K	Audio
A10K	10K	Audio
A50K	50K	Audio
A100K	100K	Audio
A500K	500K	Audio
A1M	1Meg	Audio
B1K	1K	Linear
B5K	5K	Linear
B10K	10K	Linear
B50K	50K	Linear
B100K	100K	Linear
B500K	500K	Linear
B1M	1Meg	Linear

Downloaded from Elcodis.com electronic components distributor