MICRO SWITCH
FREEPORT ILLINOIS U S A
A DIVISION OF HONEYWELL
FED. MFG. CODE 81929

SWITCH–BASIC

CATALOG LISTING
BA-1RV5435246-A2

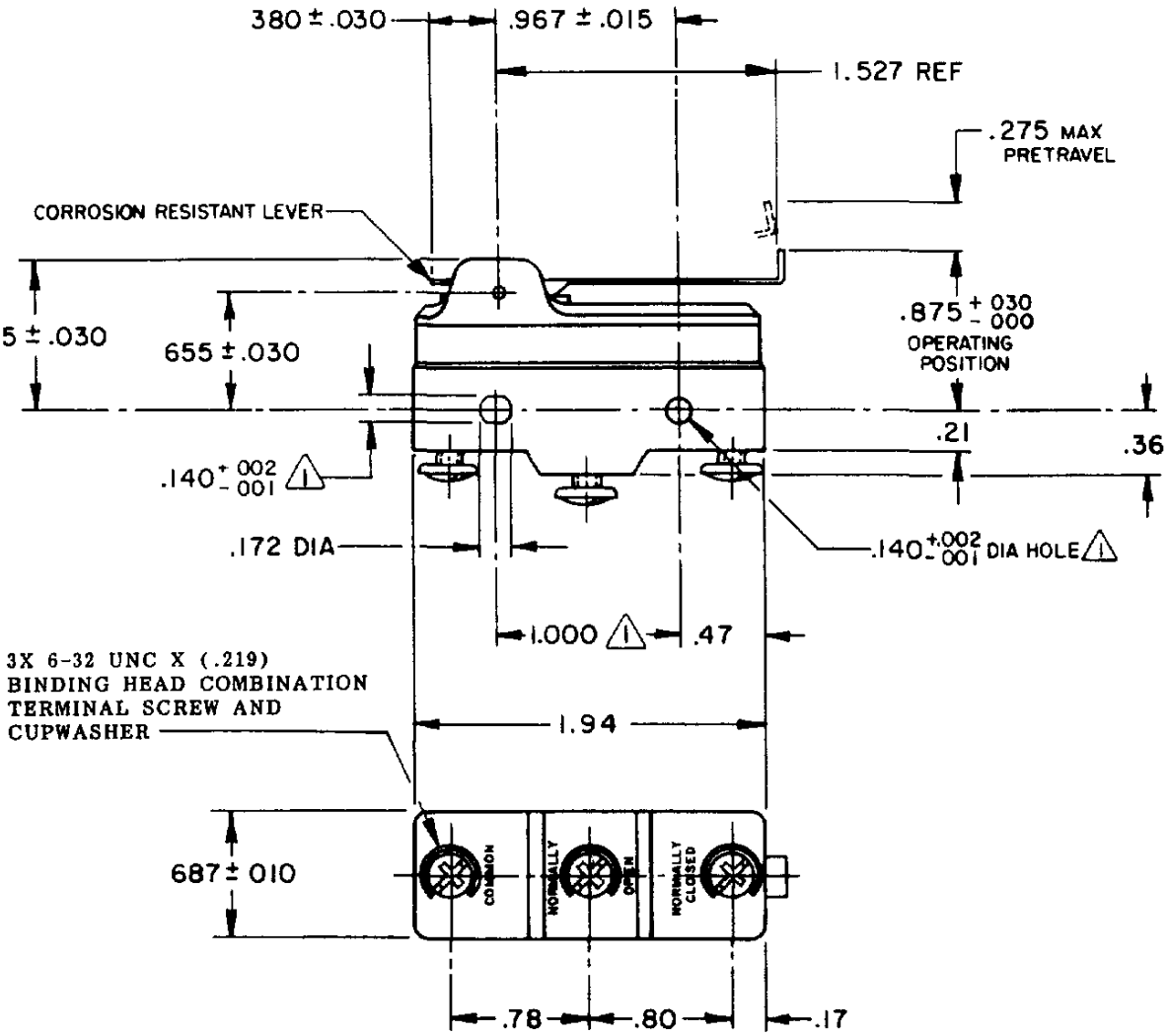

NOTES

1. MOUNTING HOLES WILL ACCEPT PINS OR SCREWS OF .139 MAX DIA ON 1.000±.002 CENTERS
2. SWITCH WILL WITHSTAND TEMPERATURE OF 250°F

THIS DRAWING COVERS A PROPRIETARY ITEM AND IS THE PROPERTY OF MICRO SWITCH, A DIVISION OF HONEYWELL. THIS DRAWING IS NOT TO BE COPIED OR USED WITHOUT THE APPROVAL OF MICRO SWITCH.

THIRD ANGLE PROJECTION

CHARACTERISTICS

OPERATING FORCE ——— 1.5 OZ MAX

RELEASE FORCE ——— 1/2 OZ MIN

DIFFERENTIAL TRAVEL ——— .030 MAX

OVERTRAVEL ——— .060 MIN

ELECTRICAL DATA

CONTACT ARRANGEMENT
S P D T

CODE L65 — 15A–125, 250 OR 480 VAC
1/2HP-125 VAC, 1HP-250 VAC

L288
L299
L306

16A 250V ~ T85 5E4

SCALE FULL

DO NOT SCALE PRINT

TOLERANCES
APPLY TO DESIGN UNITS CONVERSIONS ARE ONLY FOR REFERENCE UNLESS NOTED TOLERANCES ARE ±

	DIM in	TOL mm/m	DIM in	TOL mm/m
NO PLACES	X	1/64		
ONE PLACE	X.X	0.4/.016	X.X	0.8/.03
TWO PLACES	X.XX	0.16/.006	X.XX	0.38/.015
THREE PLACES			X.XXX	0.13/.005
ANGLES				

SI METRIC — US CUSTOMARY
DESIGN UNITS ☐ ☒

WEIGHT .063 LB

MICRO SWITCH — BA-1RV5435246-A2 PAGE 1 OF 1

REPLACES X 71636-BA
RELEASE NO. PR-11436T

DRAWING NUMBER 5
ISSUE

REVISIONS

A	CO-73287-J	JAL 22 NOV 93
B	CO-77588	MAM 29 MAR 94
C	C093346	DLT 31 AUG 98
D	C093921	GJW 13 JAN 99

CHECK — CHECK — 10 AUG 82 — CER — CHECK — 82 AUG 6 — DRAWN DJS

FORMTEK
FO-52848-A

Downloaded from Elcodis.com electronic components distributor