MICRO SWITCH
a Honeywell Division
FED.MFG.CODE 91929

MINIATURE PRECISION LIMIT SWITCH

CATALOG LISTING
914CE28-9

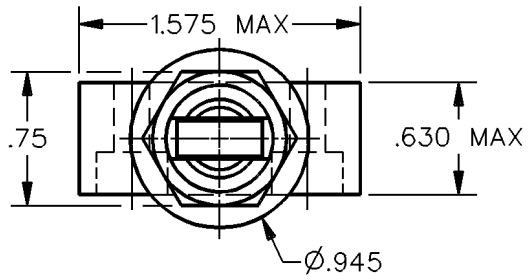

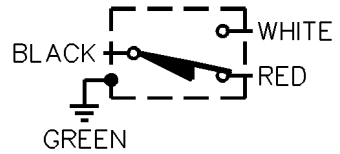

CIRCUIT DIAGRAM

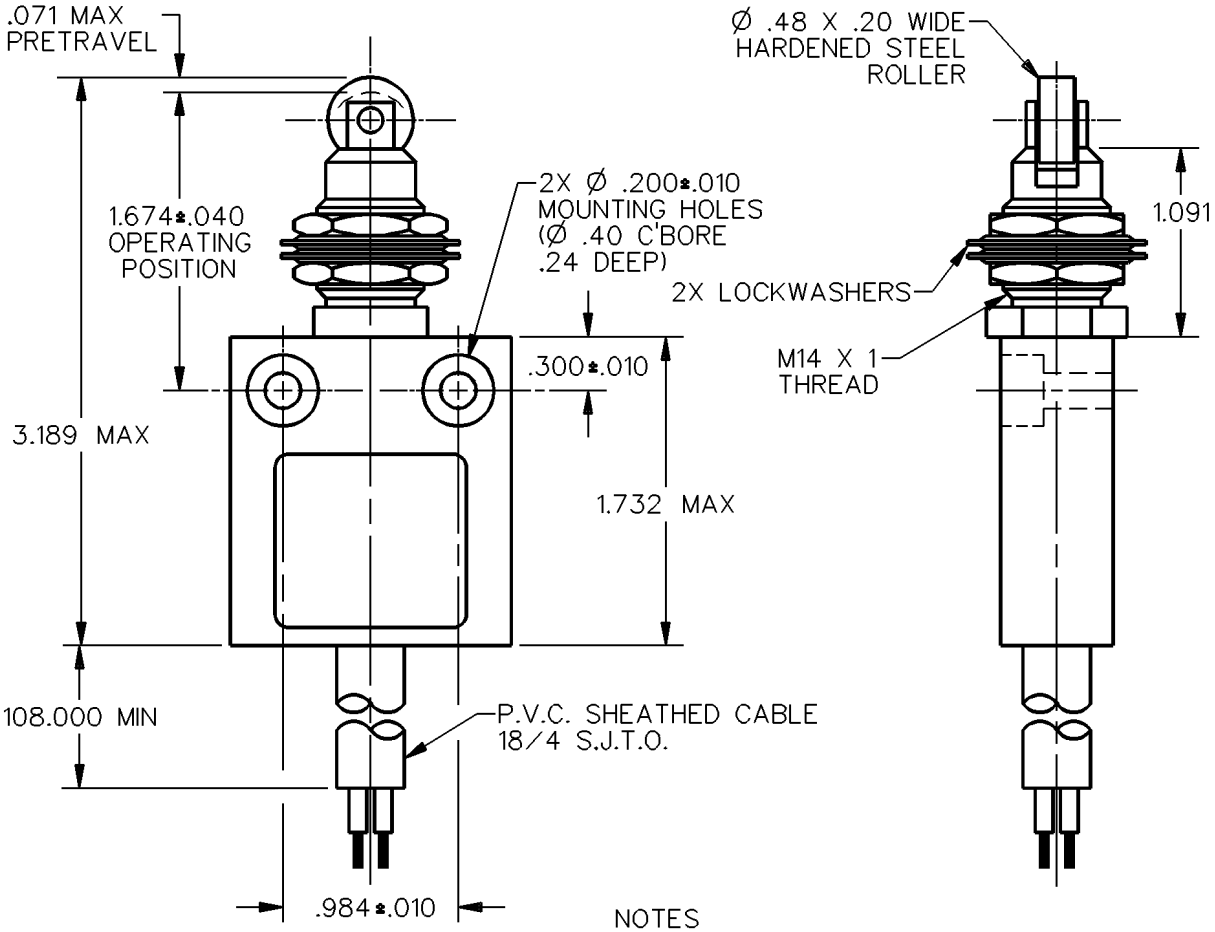

NOTES
1 – ZINC HOUSING FINISHED WITH GRAY PAINT
2 – SWITCH MOUNTS THRU A Ø.571 HOLE
3 – .165 MAX PANEL THICKNESS

ANSI Y14.5M–1982 APPLIES

THIS DRAWING COVERS A PROPRIETARY ITEM AND IS THE PROPERTY OF MICRO SWITCH, A DIVISION OF HONEYWELL. THIS DRAWING IS NOT TO BE COPIED OR USED WITHOUT THE APPROVAL OF MICRO SWITCH.

THIRD ANGLE PROJECTION

CHARACTERISTICS	ELECTRICAL DATA	SCALE FULL — DO NOT SCALE PRINT
OPERATING FORCE 2 LBS 10 1/2 OZ MAX	CONTACT ARRANGEMENT S P D T	UNLESS OTHERWISE SPECIFIED TOLERANCES ARE
RELEASE FORCE — — — — — 1 LB MIN		ONE PLACE (.0) ±.030
DIFFERENTIAL TRAVEL — — — .004 MAX		TWO PLACE (.00) ±.015
OVERTRAVEL — — — — — — .118 MIN	5A – 250 VAC 1/10HP – 125 OR 250 VAC	THREE PLACE (.000) ±.005
		ANGLES ±
		WEIGHT

914CE28-9 | REPLACES | RELEASE NO. PR-7324 | M DRAWING NUMBER | 4 ISSUE | CHECK

REVISIONS
A CO-69061 S A V 7 OCT 91

CHECK | CHECK | CHECK

DDM/CAD DRAWN S A V 7 OCT 91

Downloaded from Elcodis.com electronic components distributor