1GP6002

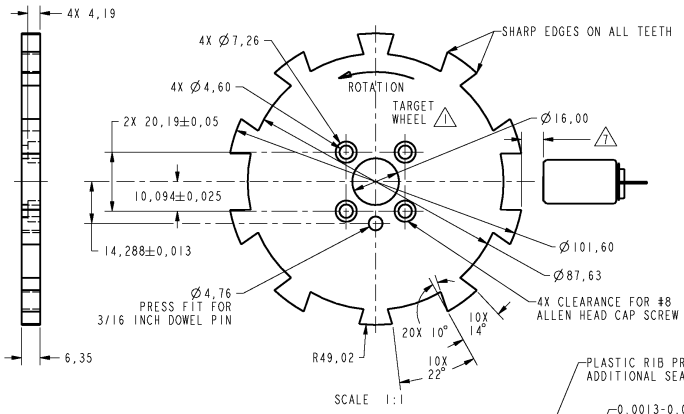

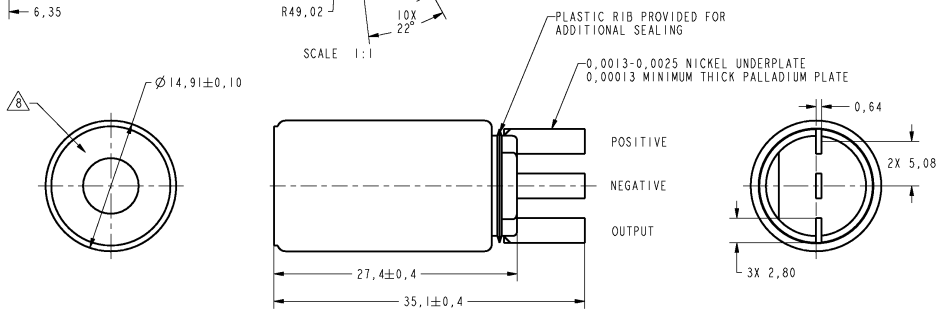

ABSOLUTE MAXIMUM RATINGS 2

SUPPLY VOLTAGE	+30V CONTINUOUS
VOLTAGE EXTERNALLY APPLIED TO OUTPUT	-0.5 TO +30V (OUTPUT HIGH)
OUTPUT CURRENT	40 mA SINKING
TEMP	150°C

RECOMMENDED OPERATING CONDITIONS

PARAMETER	CONDITIONS	MIN	TYP	MAX	UNITS
OPERATING TEMPERATURE		-40		+150	°C
SUPPLY VOLTAGE		4.5		24	VDC
SUPPLY CURRENT			10	20	mA
OUTPUT VOLTAGE	LOW OUTPUT			.6	VDC
OUTPUT CURRENT	LOW OUTPUT			20	mA
OUTPUT LEAKAGE CURRENT	HIGH OUTPUT			10	µA
RISE TIME	10% TO 90%			15	µS
FALL TIME	90% TO 10%			1.0	µS

OPERATING SPECIFICATIONS 3 4 5 6 7

	LIMIT	CONDITIONS	UNITS
4 OPERATE 5 RELEASE	2.6°±1.25° 3.0°±2.50°	AIR GAP 0,13 - 2,03 V SUPPLY 4.5-24 TEMP -40 TO 150 RPM 10 TO 3600	mm VOLTS DEG

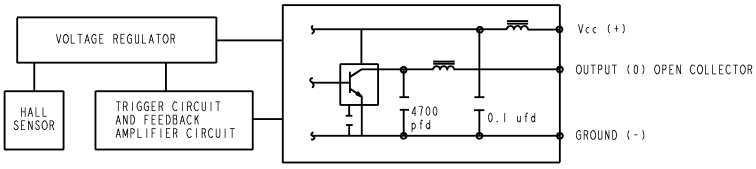

BLOCK DIAGRAM SHOWING CURRENT SINKING OUTPUT

NOTES
1. TARGET SHOULD BE MADE OF C-1018 STEEL OR ENGINEERING APPROVED EQUIVALENT, ANNEAL AFTER MACHINING OR FORMING
2. MAX LIMITS THAT SWITCH WILL WITHSTAND WITHOUT DAMAGE
3. OPERATING SPECIFICATION IS BASED ON TARGET SHOWN IN FIGURE 1 AND WILL VARY WITH TARGET GEOMETRY
4. OPERATE (DEGREES) IS THE ANGULAR DISTANCE FROM THE LEADING EDGE OF THE TOOTH TO THE CENTERLINE OF THE SENSOR
5. RELEASE (DEGREES) IS THE ANGULAR DISTANCE FROM THE TRAILING EDGE OF THE TOOTH TO THE CENTERLINE OF THE SENSOR
6. ELECTRICAL CHARACTERISTICS ARE GUARANTEED WITH MAX EXTERNAL LOAD CAPACITANCE < 550 pfd
7. AIR GAP IS THE DISTANCE FROM SENSOR FACE TO TARGET
8. CATALOG LISTING, DATE CODE AND SERIAL NUMBER LOCATED IN THIS AREA
9 - RELIABILITY AND EMI PERFORMANCE IS BASED ON TS 060 234
10 - FOR VALUE ADDED ASSEMBLY CONSIDERATIONS REFERENCE APPLICATION NOTE PK-80139

CAUTION ELECTROSTATIC SENSITIVE DO NOT OPEN OR HANDLE EXCEPT AT A STATIC FREE WORKSTATION
ESD SENSITIVITY: CLASS 3

THIS DRAWING COVERS A PROPRIETARY ITEM AND IS THE PROPERTY OF MICRO SWITCH. A DIVISION OF HONEYWELL. THIS DRAWING IS NOT TO BE COPIED OR USED WITHOUT THE APPROVAL OF MICRO SWITCH.

MICRO SWITCH a Honeywell Division
FED. MFG. CODE 91929

GEARTOOTH SENSOR

CATALOG LISTING 1GP6002

ANSI Y14.5M-1982 APPLIES

THIRD ANGLE PROJECTION
SCALE 3 : 1
DO NOT SCALE PRINT
UNLESS OTHERWISE SPECIFIED TOLERANCES ARE
NO PLACE (0.) ± 1 MM
ONE PLACE (0.0) ± 0.4 MM
TWO PLACE (0.00) ± 0.15 MM
ANGLES ±
WEIGHT

1GP6002 PAGE 1 OF 1 REPLACES RELEASE NO. 200342
DRAWING NUMBER ISSUE 1 CHECK
REVISIONS
CHECK 9 MAY 00 CHECK SAV 9 MAY 00 CHECK 9 MAY 00
PTC/CAD 30 DRAWN GRT

Downloaded from Elcodis.com electronic components distributor