MICRO SWITCH
A DIVISION OF MINNEAPOLIS-HONEYWELL REGULATOR COMPANY
FREEPORT, ILLINOIS
FED. MFR. CODE 91929

ACTUATOR - SWITCH

CATALOG LISTING
JX - 49

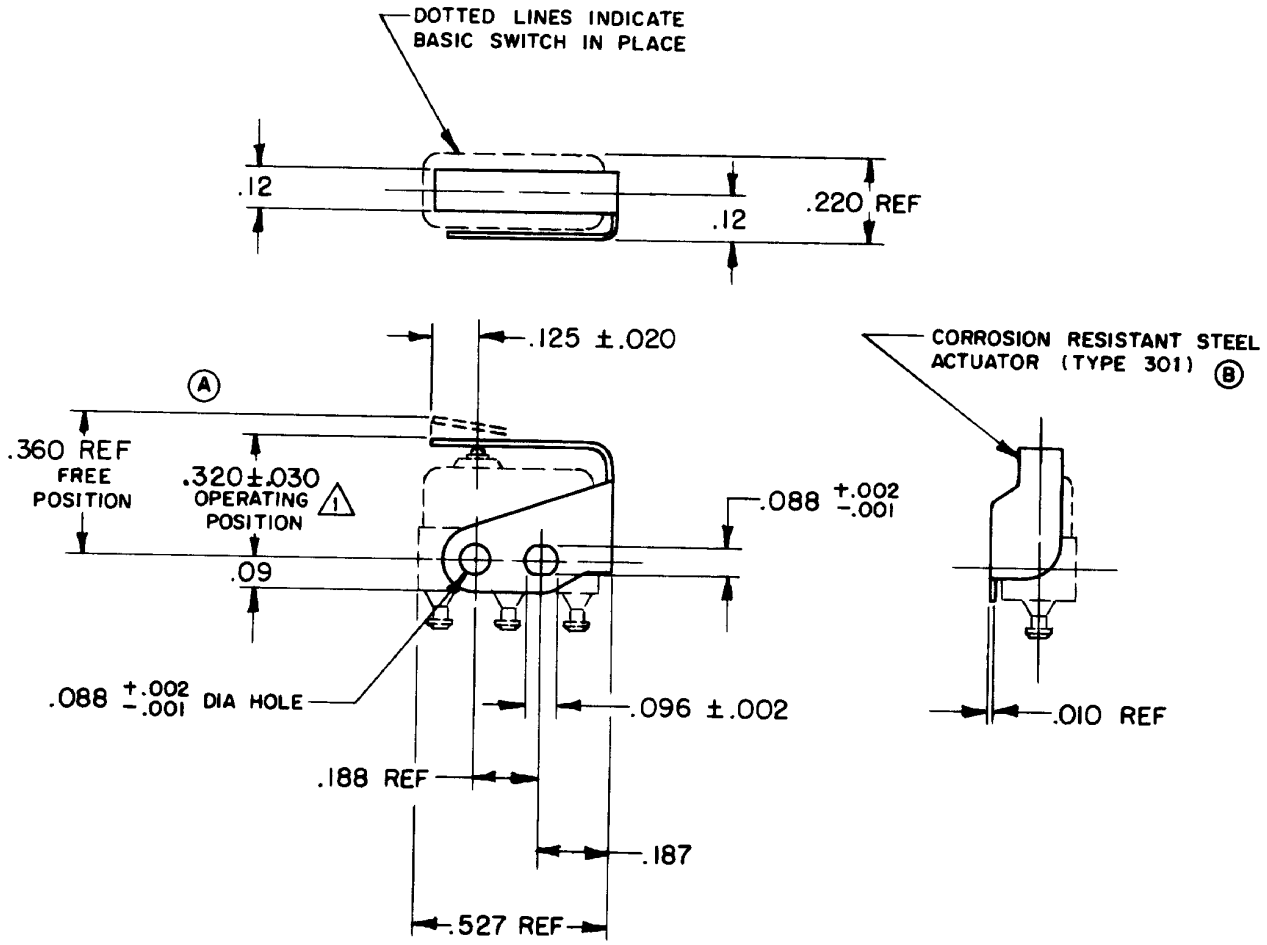

NOTE-
1 SLIGHT ROTATION BETWEEN BASIC AND ACTUATOR MAY BE NECESSARY TO OBTAIN OPERATING POSITION, BASED ON USING NO. 2-56 MACHINE SCREWS

THIS DRAWING COVERS A PROPRIETARY ITEM AND IS THE PROPERTY OF MICRO SWITCH, A DIVISION OF MINNEAPOLIS-HONEYWELL REGULATOR CO. THIS DRAWING IS NOT TO BE COPIED OR USED WITHOUT THE APPROVAL OF MICRO SWITCH.

CHARACTERISTICS WITH ISXI-T BASIC SWITCH INSTALLED

OPERATING FORCE ---- 7 OZ APPROX

RELEASE FORCE ----- 2 OZ APPROX

DIFFERENTIAL TRAVEL ---.030 APPROX

OVERTRAVEL ------- .010 MIN

ELECTRICAL DATA

CONTACT ARRANGEMENT	BREAK DISTANCE

SCALE 2 TO 1

DO NOT SCALE PRINT

UNLESS OTHERWISE SPECIFIED
DIMENSIONS ARE IN INCHES

TOLERANCES ARE:

ONE PLACE	(.0)	±.030
TWO PLACE	(.00)	±.015
THREE PLACE	(.000)	±.005
ANGLES		±

WEIGHT

JX - 49

M

DRAWING NUMBER

ISSUE 3 4 X 2

RELEASE NO. SR 9726

REPLACES

REVISIONS

A	CO22579	O M W 1 MAY 67
B	CO22579	M B S 19 APR 68
C	CO82929	DLT 13 MAY 96

CHECK 18 JULY '61 DES CHECK 18 JULY '61 DAW CHECK 18 JULY 61 DRAWN K L B

FO-50378

Downloaded from Elcodis.com electronic components distributor