MICRO SWITCH
a Honeywell Division
FED. MFG. CODE 91929

# SWITCH - TOGGLE

CATALOG LISTING
## 11TS115 SERIES CHART 1

THIS DRAWING COVERS A PROPRIETARY ITEM AND IS THE PROPERTY OF MICRO SWITCH. A DIVISION OF HONEYWELL. THIS DRAWING IS NOT TO BE COPIED OR USED WITHOUT THE APPROVAL OF MICRO SWITCH

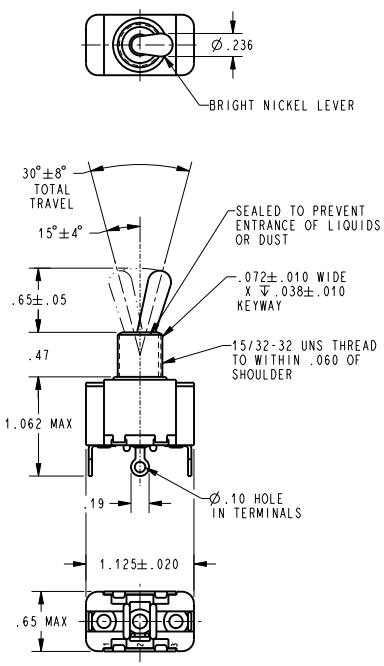


| CATALOG LISTING | CIRCUIT WITH TOGGLE IN | | | ELECTRICAL DATA |
|---|---|---|---|---|
| | EXTREME POSITION KEYWAY 1-2 SIDE | CENTER | EXTREME POSITION OPPOSITE 2-3 SIDE | |
| 11TS115-1 | ON | OFF | ON | L311 10A 277 VAC, 20A 125 VAC 3/4HP 125, 250 VAC |
| 11TS115-2 | OFF | NONE | ON | |
| 11TS115-3 | ON | NONE | ON | |
| 11TS115-5 | MOM ON | OFF | ON | |
| 11TS115-6 | MOM ON | NONE | OFF | |
| 11TS115-7 | MOM ON | OFF | MOM ON | |
| 11TS115-8 | MOM ON | NONE | ON | |

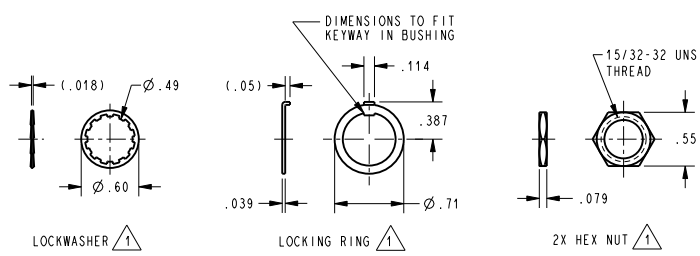


NOTES
1 FURNISHED UNASSEMBLED
2 - VISUAL DIFFERENCES IN TERMINAL SHAPES AND PLATING POSSIBLE

THIRD ANGLE PROJECTION
SCALE FULL
DO NOT SCALE PRINT
UNLESS OTHERWISE SPECIFIED TOLERANCES ARE
ONE PLACE (.0) ±.030
TWO PLACE (.00) ±.015
THREE PLACE (.000) ±.005
ANGLES ±
WEIGHT

ANSI Y14.5M-1982 APPLIES

CATALOG LISTING 11TS115 SERIES CHART 1
PAGE 1 OF 1
RELEASE NO. CO-29429 (PR)
REPLACES -
ISSUE 13
REVISIONS
A 0001066 TRF 07AUG03
CHECK
CHECK 07AUG03
CHECK SAV
CHECK 07AUG03
PTC/CAD 2D
DRAWN TRF 07AUG03

Downloaded from Elcodis.com electronic components distributor