REVISIONS				
SYM	DESCRIPTION	REVISED BY	DATE	APPR

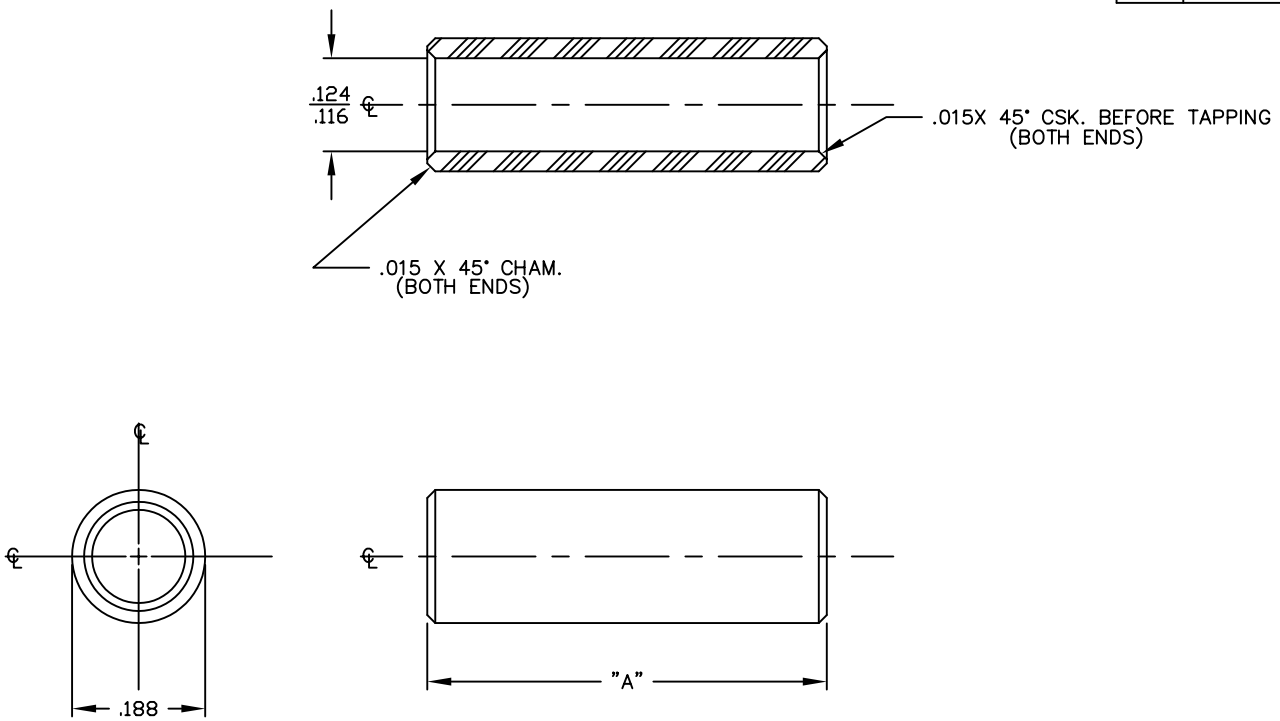

SPACERS	
PART NO.	DIM "A"
9015	.125
9016	.187
9017	.250
9018	.312
9019	.375
9020	.437
9021	.500
9022	.562
9023	.625
9024	.687
9025	.750
9026	.812
9027	.875
9028	.937
9029	1.000

MATERIAL BRASS 360 1/2 HARD		FINISH NICKEL	
DIMENSIONAL TOLERANCES UNLESS OTHERWISE SPECIFIED		TITLE BRASS ROUND 3/16" SPACERS #4 CLEARANCE	
.XX	.XXX	.XXXX	
– – –	– – –	– – –	
FRACTIONS	ANGLES	SCALE	
– – –	– – –	NONE	
HEAT TREAT – – –		DRAWN: T. LORD	DATE 02/10/03
PLOT SCALE: 1=1		CHECKED: T. LORD	DATE 02/10/03
		APPROVED: T. LORD	DATE 02/10/03

ABBATRON

Electronic Connectors and Hardware

632 Arch Street, Meadville, Pa. 16335

SIZE	DRAWING NUMBER	ISSUE
B	SD: SMP-00414	A

Downloaded from Elcodis.com electronic components distributor