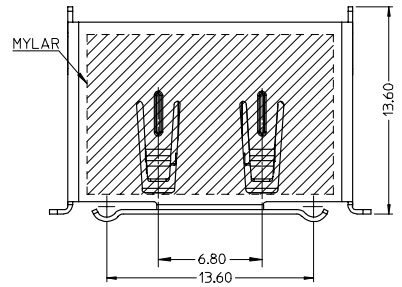

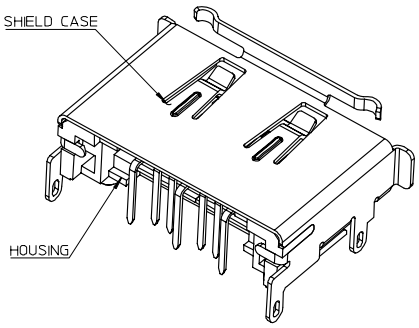

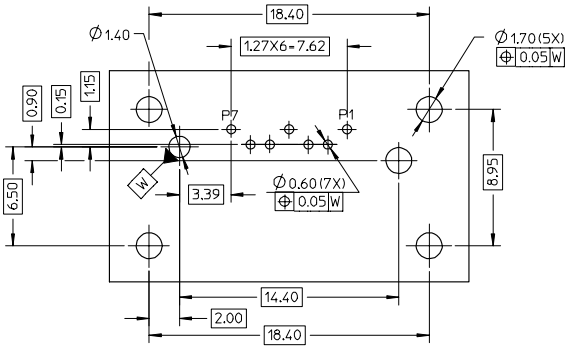

RECOMMEND PCB LAYOUT(CONNECTOR SIDE)
THICKNESS=1.30(ALL TOLERANCE: +/-0.05)

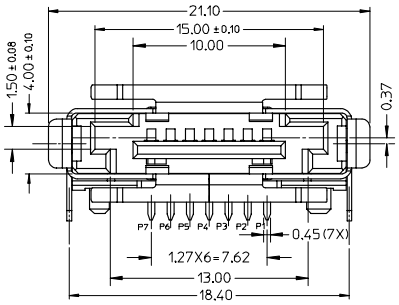

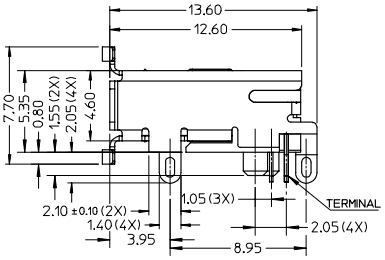

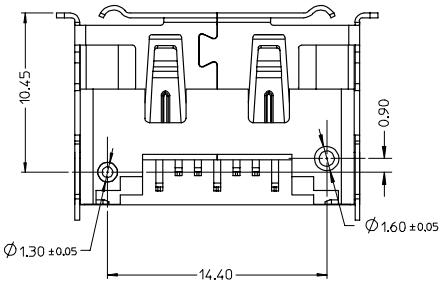

NOTES:

1. MATERIAL:
   HOUSING: THERMAL PLASTIC.COLOR: BLACK, UL94V-0.
   SHIELD CASE: COPPER ALLOY.
   TERMIANL: COPPER ALLOY.
2. PLATING:
   SHIELD CASE: 100~200μ" SOLDERABLE NICKEL OVER ALL.
   TERMINAL: CONTACT AREA GOLD PLATING(SEE CHART) AND
   SOLDER TAIL 50~100μ" TIN ALLOY PLATING
   OVER 50μ" MIN. NICKEL.
3. PRODUCT SPEC REFER TO PS-47082-001.
4. PACKAGE SPEC REFER TO PK-47379-001.
5. PRODUCT MEET STANDARD 1.0 REVISION OF THE SERIAL ATA II:
   CABLE AND CONNECTOR VOL 2 SPECIFICATION.
6. PRODUCT COMPLIANT TO RoHS DIRECTIVE 2002/95/EC AND ELV 2000/53/EC.

REVISED		DESCRIPTION	REV
EC NO:	2007/04/30		
DRWN:GLLI	2007/05/04		
CH'KD:	2007/05/09		
APPR: JNCHEN			

D

QUALITY SYMBOLS: ▼=0, (C)=0

GENERAL TOLERANCES (UNLESS SPECIFIED)

	mm	INCH
4 PLACES	± ---	± ---
3 PLACES	± ---	± ---
2 PLACES	± 0.2	± ---
1 PLACE	± 0.25	± ---
ANGULAR ± 3 °		

DRAFT WHERE APPLICABLE MUST REMAIN WITHIN DIMENSIONS

DIMENSION STYLE	SCALE	DESIGN UNITS	
MM ONLY	1:1	METRIC	THIRD ANGLE PROJECTION

		DATE
DRAWN BY	DIXON LI	2006/1/17
CHECKED BY	JENNY ZENG	2006/1/17
APPROVED BY	GRATE MA	2006/1/17

TITLE: EXTERNAL SATA PLUG WITH SHELL DIP MOUNT TYPE

molex MOLEX INCORPORATED

MATERIAL NO.: SEE TABLE IN SHEET 3

DOCUMENT NO.: SD-47392-100

SHEET NO.: 1 OF 3

SIZE: A3

THIS DRAWING CONTAINS INFORMATION THAT IS PROPRIETARY TO MOLEX INCORPORATED AND SHOULD NOT BE USED WITHOUT WRITTEN PERMISSION

Downloaded from Elcodis.com electronic components distributor

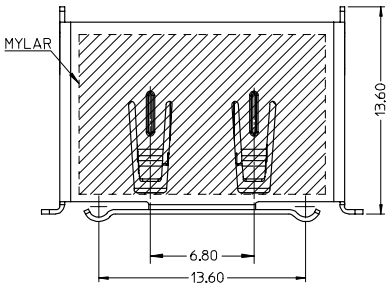

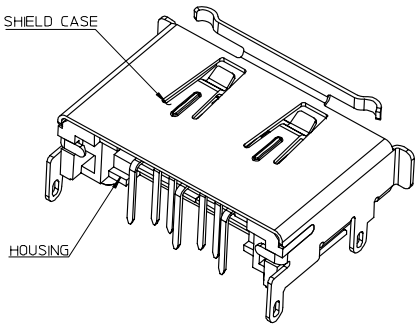

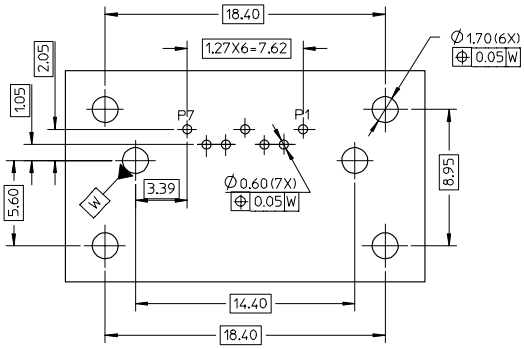

RECOMMEND PCB LAYOUT(CONNECTOR SIDE)
THICKNESS=1.30(ALL TOLERANCE: +/-0.05)

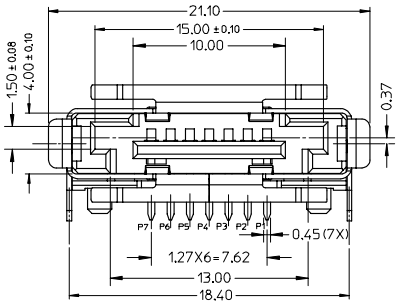

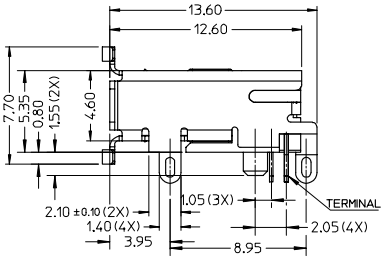

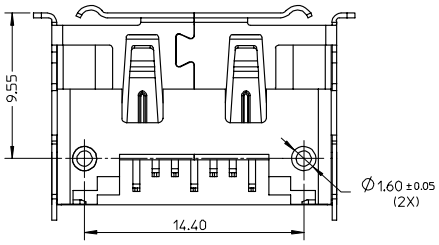

REV	DESCRIPTION	
D	REVISED	EC NO: 2007/04/30 DRWN:GLLI 2007/05/04 CH'KD: 2007/05/09 APPR: JNCHEN

QUALITY SYMBOLS: ▼=0 ▽=0

GENERAL TOLERANCES (UNLESS SPECIFIED)	mm	INCH
4 PLACES	±---	±---
3 PLACES	±---	±---
2 PLACES	±0.2	±---
1 PLACE	±0.25	±---
ANGULAR ± 3 °		

DRAFT WHERE APPLICABLE MUST REMAIN WITHIN DIMENSIONS

DIMENSION STYLE	SCALE	DESIGN UNITS	
MM ONLY	1:1	METRIC	THIRD ANGLE PROJECTION

DRAWN BY: DIXON LI	DATE: 2006/1/17	TITLE: EXTERNAL SATA PLUG WITH SHELL DIP MOUNT TYPE
CHECKED BY: JENNY ZENG	DATE: 2006/1/17	
APPROVED BY: GRATE MA	DATE: 2006/1/17	molex MOLEX INCORPORATED
MATERIAL NO.: SEE TABLE IN SHEET 3	DOCUMENT NO.: SD-47392-100	SHEET NO.: 2 OF 3
SIZE: A3	THIS DRAWING CONTAINS INFORMATION THAT IS PROPRIETARY TO MOLEX INCORPORATED AND SHOULD NOT BE USED WITHOUT WRITTEN PERMISSION	

tb_frame_A3_P_AM_T
Rev. D 2004/06/28

Downloaded from Elcodis.com electronic components distributor

MATERIAL MUBER	HOUSING COLOR	TERMINAL CONTACT PLATING	HOUSING MATERIAL	REMARK
473920205	ORANGE	0.76 MICRONS MIN	PA46(ONLY USE FOR WAVE SOLDER)	TWO POSTS ARE STAGGER AND DIAMETERS ARE DIFERRENT (DETAILS REFER TO SHEET 1)
473920204	RED			
473920203	BLUE			
473920202	NATURE			
473920201	BLACK			
473920105	ORANGE	0.38 MICRONS MIN		
473920104	RED			
473920103	BLUE			
473920102	NATURE			
473920101	BLACK			
473920005	ORANGE	GOLD FLASH		
473920004	RED			
473920003	BLUE			
473920002	NATURE			
473920001	BLACK			
473920305	ORANGE	0.76 MICRONS MIN	PA6T(USE FOR IR AND WAVE SOLDER)	
473920304	RED			
473920303	BLUE			
473920302	NATURE			
473920301	BLACK			
473920405	ORANGE	0.38 MICRONS MIN		
473920404	RED			
473920403	BLUE			
473920402	NATURE			
473920401	BLACK			
473920505	ORANGE	GOLD FLASH		
473920504	RED			
473920503	BLUE			
473920502	NATURE			
473920501	BLACK			

MATERIAL NUMBER	HOUSING COLOR	TERMINAL CONTACT PLATING	HOUSING MATERIAL	REMARK
473921205	ORANGE	0.76 MICRONS MIN	PA46(ONLY USE FOR WAVE SOLDER)	TWO POSTS ARE IN LINE AND DIAMETERS ARE SAME (DETAILS REFER TO SHEET 2)
473921204	RED			
473921203	BLUE			
473921202	NATURE			
473921201	BLACK			
473921105	ORANGE	0.38 MICRONS MIN		
473921104	RED			
473921103	BLUE			
473921102	NATURE			
473921101	BLACK			
473921005	ORANGE	GOLD FLASH		
473921004	RED			
473921003	BLUE			
473921002	NATURE			
473921001	BLACK			
473921305	ORANGE	0.76 MICRONS MIN	PA6T(USE FOR IR AND WAVE SOLDER)	
473921304	RED			
473921303	BLUE			
473921302	NATURE			
473921301	BLACK			
473921405	ORANGE	0.38 MICRONS MIN		
473921404	RED			
473921403	BLUE			
473921402	NATURE			
473921401	BLACK			
473921505	ORANGE	GOLD FLASH		
473921504	RED			
473921503	BLUE			
473921502	NATURE			
473921501	BLACK			

REVISED
EC NO: SH2007-0788 2007/04/30
DRWN:GLLI 2007/05/04
CHKD:JTIAN 2007/05/09
APPR: JNCHEN
DESCRIPTION
REV
D

QUALITY SYMBOLS
▼=0
▽=0

GENERAL TOLERANCES (UNLESS SPECIFIED)

	mm	INCH
4 PLACES	± ---	± ---
3 PLACES	± ---	± ---
2 PLACES	± 0.2	± ---
1 PLACE	± 0.25	± ---
ANGULAR ± 3 °		

DRAFT WHERE APPLICABLE MUST REMAIN WITHIN DIMENSIONS

DIMENSION STYLE: MM ONLY
SCALE
DESIGN UNITS: METRIC
THIRD ANGLE PROJECTION

DRAWN BY: DIXON LI DATE: 2006/1/17
CHECKED BY: JENNY ZENG DATE: 2006/1/17
APPROVED BY: GRATE MA DATE: 2006/1/17

TITLE: EXTERNAL SATA PLUG WITH SHELL DIP MOUNT TYPE

molex MOLEX INCORPORATED

MATERIAL NO.: SEE TABLE
DOCUMENT NO.: SD-47392-100
SHEET NO.: 3 OF 3
SIZE: A3

THIS DRAWING CONTAINS INFORMATION THAT IS PROPRIETARY TO MOLEX INCORPORATED AND SHOULD NOT BE USED WITHOUT WRITTEN PERMISSION

tb_frame_A3_P_AM_T
Rev. D 2004/06/28

Downloaded from Elcodis.com electronic components distributor