ISS.	DATE	E.C.N.	DESCRIPTION
3	9-Jan-09	1/09/1235	PART TABLE UPDATED

© 2008 CARCLO

ALL DIMENSIONS IN mm

CUSTOMER DRAWING

NOTES:
1. MATERIAL - UV STABILISED POLYCARBONATE
2. INCLUSIONS SPECIFIED TO BS4301

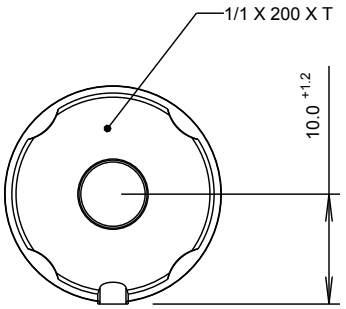

3D VIEW
SCALE 1:1

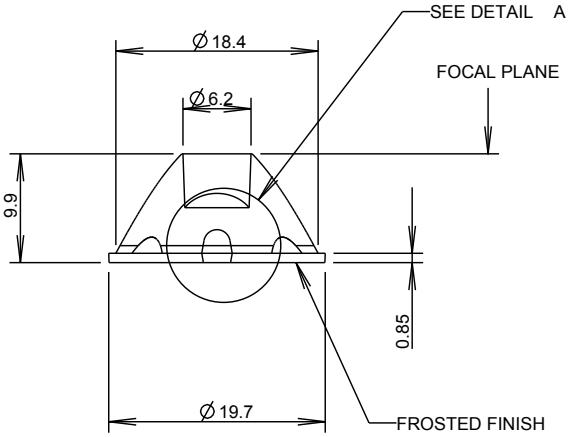

DETAIL A
SCALE 4:1

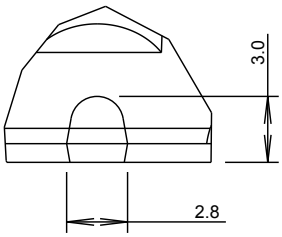

DESCRIPTION	PART NO.
SOFT NARROW BEAM	10138
SOFT MEDIUM BEAM	10139

carclo technical plastics

CARCLO TECHNICAL PLASTICS (SLOUGH)
111 BUCKINGHAM AVE, SLOUGH
SL1 4PF, ENGLAND
TEL: +44 1753 575011 FAX: +44 1753 811359
e-mail: design@carclo-optics.com}

GENERAL TOLERANCES (UNLESS STATED)

LINEAR		ANGULAR	
X	+/- 0.25	X	+/- 1°
X.X	+/- 0.1	X.X	+/- 0.5°
X.XX	+/- 0.05	X.XX	+/- 0.1°

CUSTOMER: CARCLO

TITLE: FROSTED 20 MM OPTIC

DRAWN: AJD DATE: 17-Aug-06

CHK'D DATE

APP'D DATE

SCALE: 2:1

CARCLO PART No.: SEE TABLE

SIZE: A4

CARCLO DRG. No.: 60424

SHEET: 1 OF 1

Downloaded from Elcodis.com electronic components distributor