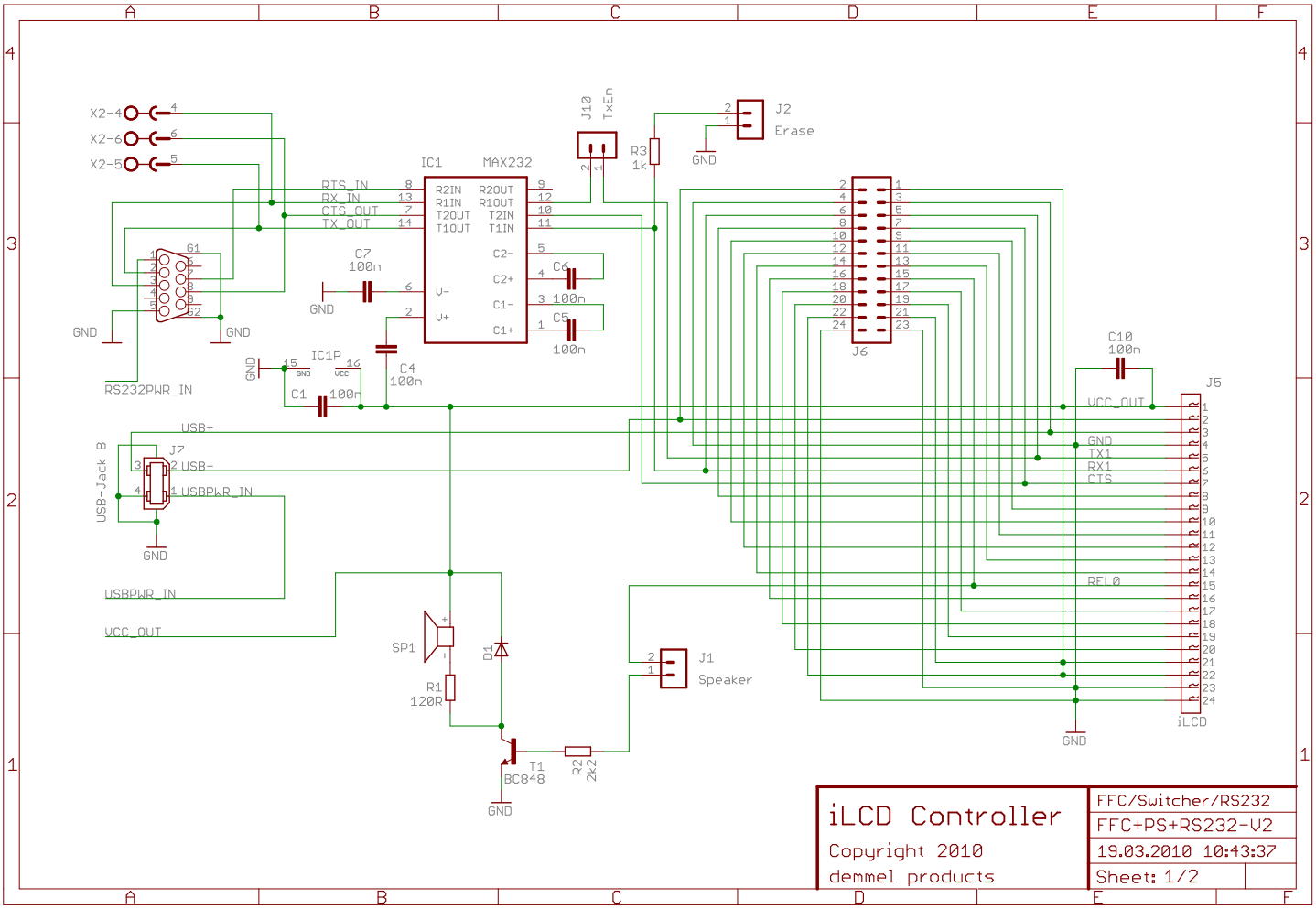

Downloaded from Elcodis.com electronic components distributor

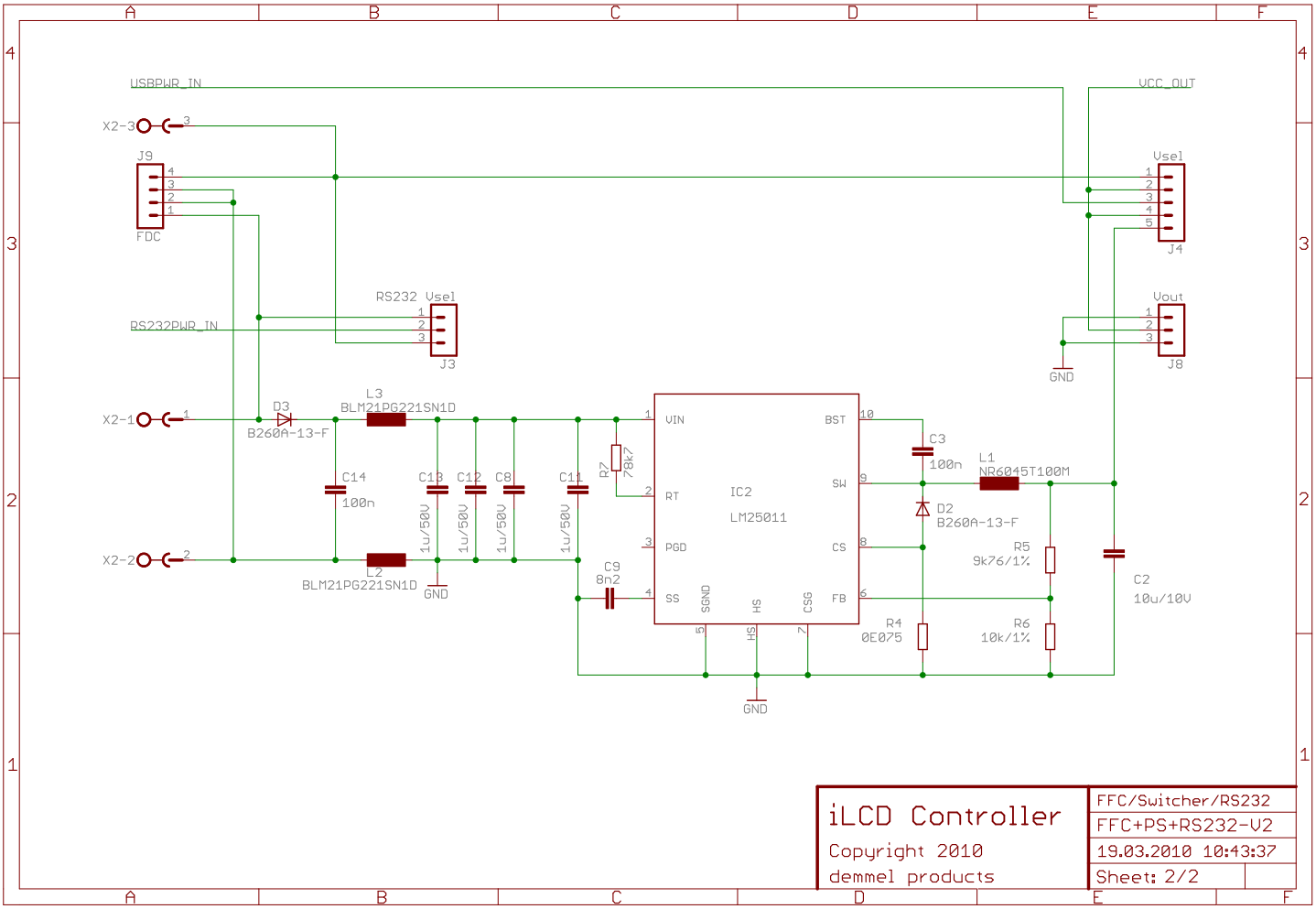

Downloaded from Elcodis.com electronic components distributor