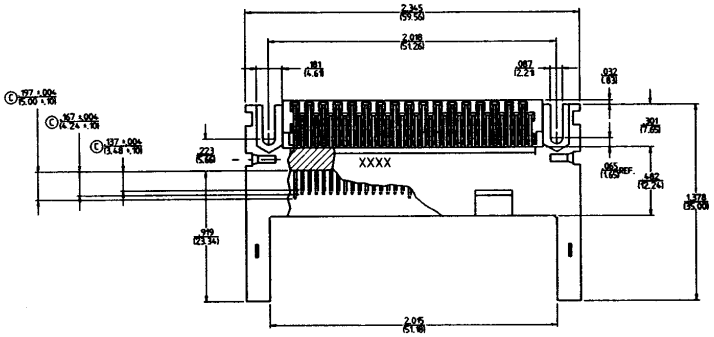

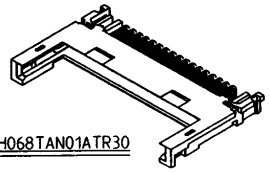

MCH068TAN01ATR30

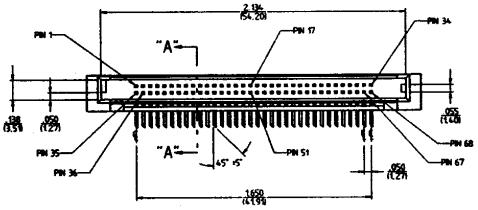

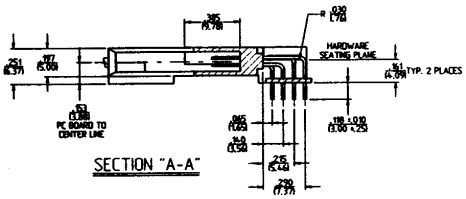

SECTION "A-A"

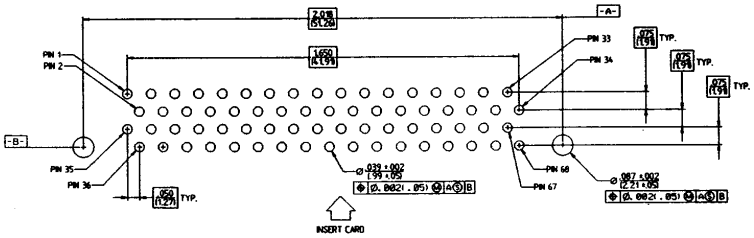

RECOMMENDED MOUNTING HOLE LAYOUT

MCH 068 T A N 01 A TR30

- MCH = MEMORY CARD HEADER
- NUMBER OF CONTACTS
- MOUNTING STYLES: T = TOP MOUNT, RIGHT ANGLE
- CONTACT STYLE: A = THRU HOLE
- HEADER STYLE: N = NO EJECT
- INSULATOR BODY STYLE: 01 = STANDARD, SINGLE PROFILE
- SOLDER OPTION RETENT: A = NO ESD, NO SOLDER RETENT CLIP
- CONTACT PLATING: TR30

HEADER:
Power Pins, .197" (5.0mm) long:
1, 17, 34, 35, 51, 68
Signal Pins, 167" (4.24mm) long:
2-16, 18-33, 37-50, 52-66
Detect Pins, .137" (3.48mm) long:
36, 67

NOTES:
1. All dimensions are in inches. Metric equivalence in parentheses are for reference only.
2. All parts packaged in trays unless requested.
3. Available in bottom mount.
4. Acquire size M2(0-80 UNC) screws for hold down hardware.
5. Plated thru holes shall be linked to the PCB grounding path.

CUSTOMER DRAWING

Robinson Nugent
812/945-0211
812/945-0805 FAX

MEMPAK MCH068TAN01ATR30
68 Position, Top Mount, Right Angle Header
Thru Hole, No ESD, No Eject, No Retent Clip

Downloaded from Elcodis.com electronic components distributor

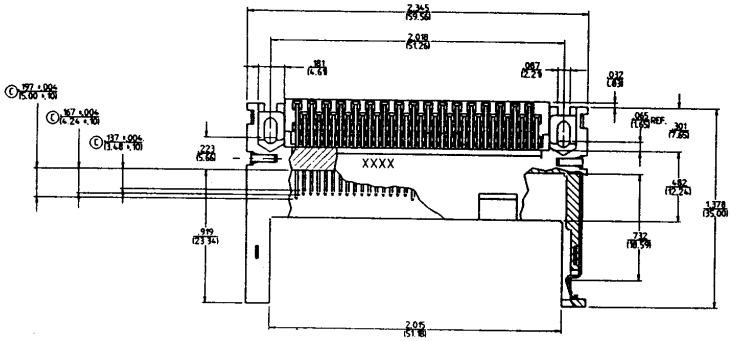

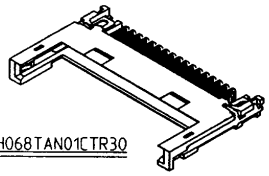

MCH068TAN01CTR30

MCH 068 T A N 01 C TR30

- MCH = MEMORY CARD HEADER
- NUMBER OF CONTACTS
- MOUNTING STYLES: T = TOP MOUNT, RIGHT ANGLE
- CONTACT STYLE: A = THRU HOLE
- HEADER STYLE: N = NO EJECT
- INSULATOR BODY STYLE: 01 = STANDARD, SINGLE PROFILE
- ESD/SOLDER RETENT CLIP OPTION: C = ESD, NO SOLDER RETENT CLIP
- CONTACT PLATING: TR30

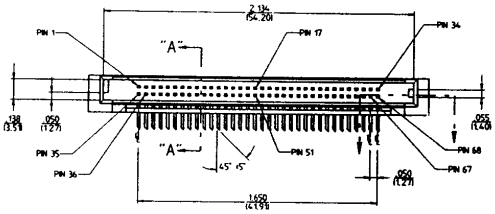

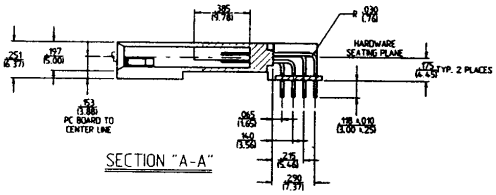

SECTION "A-A"

HEADER:
Power Pins, .197" (5.0mm) long:
1, 17, 34, 35, 51, 68
Signal Pins, 167" (4.24mm) long:
2-16, 18-33, 37-50, 52-66
Detect Pins, .137" (3.48mm) long:
36, 67

NOTES:

1. All dimensions are in inches. Metric equivalence in parentheses are for reference only.
2. All parts packaged in trays unless requested.
3. Available in bottom mount.
4. Acquire size M2(0-80 UNC) screws for hold down hardware.
5. Plated thru holes shall be linked to the PCB grounding path.

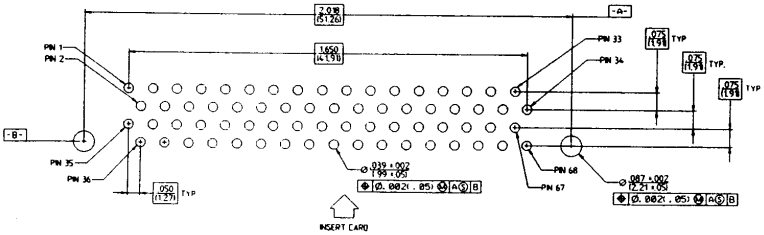

RECOMMENDED MOUNTING HOLE LAYOUT

CUSTOMER DRAWING

Robinson Nugent
812/945-0211
812/945-0805 FAX

MEMPAK MCH068TAN01CTR30
68 Position, Top Mount, Right Angle Header
No Eject with ESD, No Retent Clip

Downloaded from Elcodis.com electronic components distributor

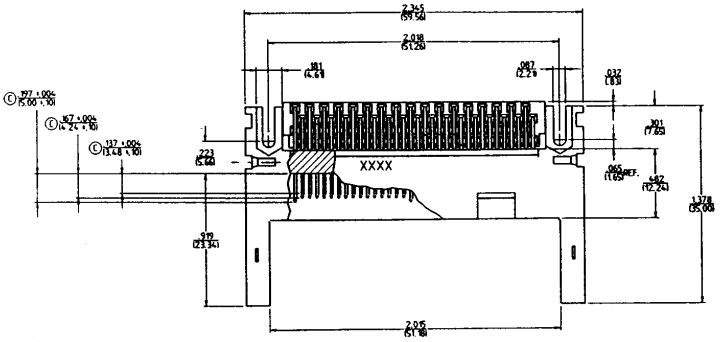

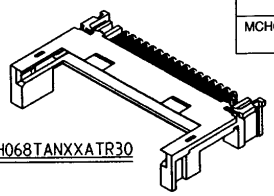

MCH068TANXXATR30

PART DESCRIPTION	STANDOFF HEIGHT	PC BOARD TO CENTER LINE	TOTAL COMPONENT HEIGHT	DIM "A" HARDWARE REFERENCE
MCH068TAN02ATR30	.157 *(4.00)*	.256 *(6.50)*	.354 *(9.50)*	.264 *(6.70)*
MCH068TAN03ATR30	.275 *(7.00)*	.374 *(9.50)*	.472 *(12.00)*	..382 *(9.70)*

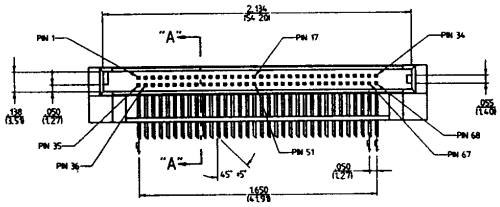

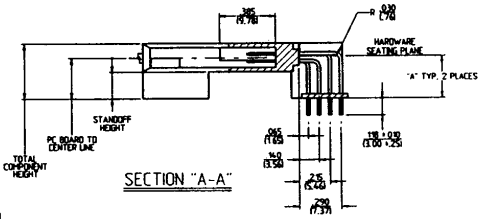

SECTION "A-A"

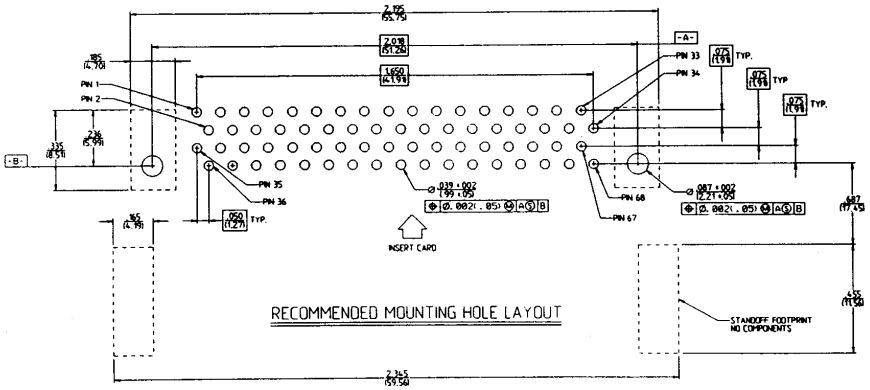

RECOMMENDED MOUNTING HOLE LAYOUT

HEADER:
Power Pins, .197" (5.0mm) long:
1, 17, 34, 35, 51, 68
Signal Pins, 167" (4.24mm) long:
2-16, 18-33, 37-50, 52-66
Detect Pins, .137" (3.48mm) long:
36, 67

NOTES:

1. All dimensions are in inches. Metric equivalence in parentheses are for reference only.
2. All parts packaged in trays unless requested.
3. Available in bottom mount.
4. Acquire size M2(0-80 UNC) screws for hold down hardware.
5. Plated thru holes shall be linked to the PCB grounding path.

CUSTOMER DRAWING

Robinson Nugent
812/945-0211
812/945-0805 FAX

MEMPAK MCH068TANXXATR30
68 Position, Top Mount, Right Angle Header
No Eject, No ESD, No Retent Clip, with Standoffs

MCH 068 T A N XX A TR30

- MCH = MEMORY CARD HEADER
- NUMBER OF CONTACTS
- MOUNTING STYLES: T = TOP MOUNT, RIGHT ANGLE
- CONTACT STYLE: A = THRU HOLE
- HEADER STYLE: N = NO EJECT
- INSULATOR BODY STYLE: 02 = 4.0mm STANDOFF, SINGLE PROFILE; 03 = 7.0mm STANDOFF, SINGLE PROFILE
- SOLDER OPTION RETENT: A = NO ESD, NO SOLDER RETENT CLIP
- CONTACT PLATING: TR30

Downloaded from Elcodis.com electronic components distributor

PART DESCRIPTION	STANDOFF HEIGHT	PC BOARD TO CENTER LINE	TOTAL COMPONENT HEIGHT	DIM "A" HARDWARE REFERENCE
MCH068TAN02CTR30	.157 *(4.00)*	.256 *(6.50)*	.354 *(9.00)*	.278 *(7.06)*
MCH068TAN03CTR30	.275 *(7.00)*	.374 *(9.50)*	.472 *(12.00)*	.396 *(10.06)*

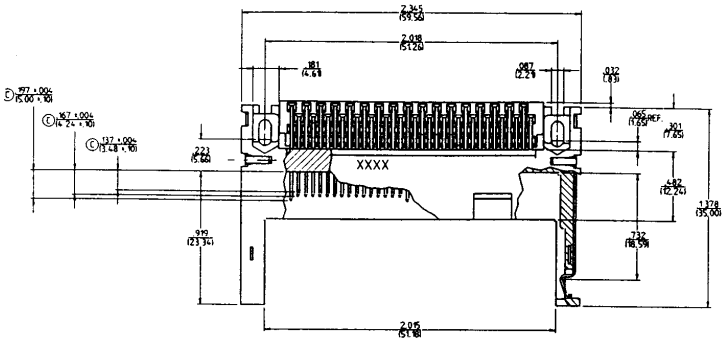

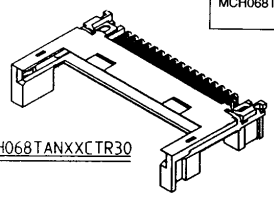

MCH068TANXXCTR30

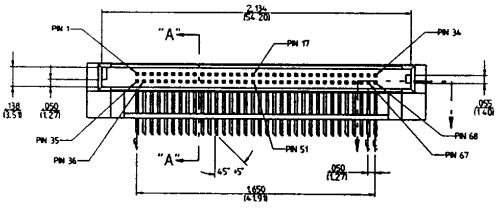

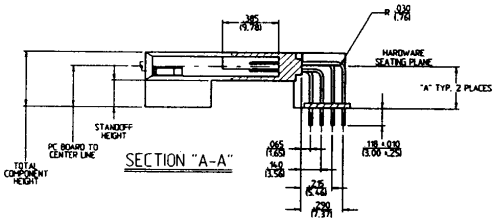

SECTION "A-A"

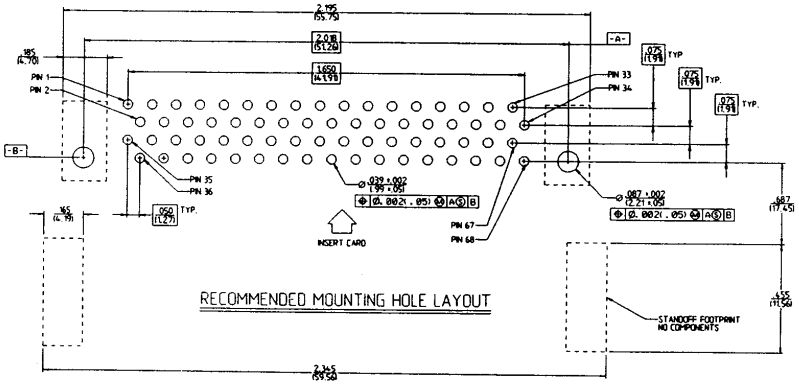

RECOMMENDED MOUNTING HOLE LAYOUT

HEADER:
Power Pins, .197" (5.0mm) long: 1, 17, 34, 35, 51, 68
Signal Pins, 167" (4.24mm) long: 2-16, 18-33, 37-50, 52-66
Detect Pins, .137" (3.48mm) long: 36, 67

NOTES:
1. All dimensions are in inches. Metric equivalence in parentheses are for reference only.
2. All parts packaged in trays unless requested.
3. Available in bottom mount.
4. Acquire size M2(0-80 UNC) screws for hold down hardware.
5. Plated thru holes shall be linked to the PCB grounding path.

CUSTOMER DRAWING

Robinson Nugent
812/945-0211
812/945-0805 FAX

MEMPAK MCH068TANXXCTR30
68 Position, Top Mount, Right Angle Header
No Eject with ESD, No Retent Clip with Standoffs

MCH 068 T A N XX C TR30

- MCH = MEMORY CARD HEADER
- NUMBER OF CONTACTS
- MOUNTING STYLES: T = TOP MOUNT, RIGHT ANGLE
- CONTACT STYLE: A = THRU HOLE
- HEADER STYLE: N = NO EJECT
- INSULATOR BODY STYLE: 02 = 4.0mm STANDOFF, SINGLE PROFILE; 03 = 7.0mm STANDOFF, SINGLE PROFILE
- ESD/SOLDER RETENT CLIP OPTION: C = ESD, NO SOLDER RETENT CLIP
- CONTACT PLATING: TR30

RN MEMPAK

Downloaded from Elcodis.com electronic components distributor

PART DESCRIPTION	DIM "A" STANDOFF HEIGHT	DIM "B" STANDOFF HEIGHT	DIM "C" PC BOARD TO CENTER LINE	DIM "D" PC BOARD TO CENTER LINE	TOTAL COMPONENT HEIGHT
MCH136TAN21ATR30	.054 *(1.37)*	.047 *(1.20)*	.146 *(3.70)*	.397 *(10.08)*	.495 *(12.57)*

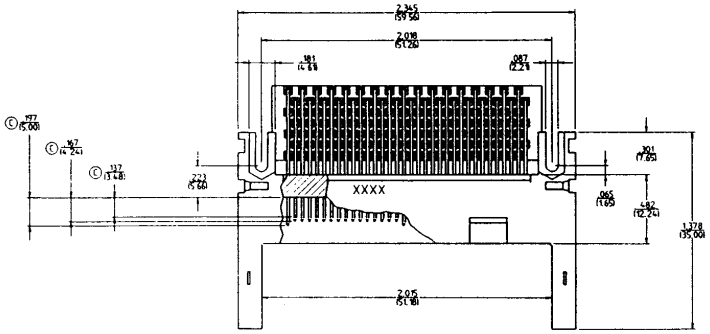

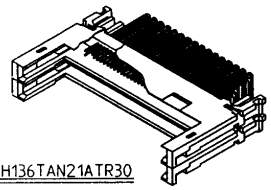

MCH136TAN21ATR30

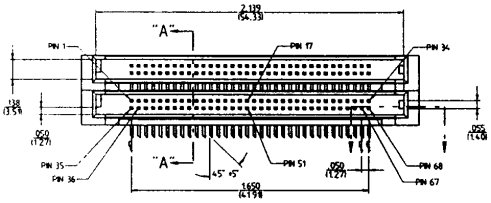

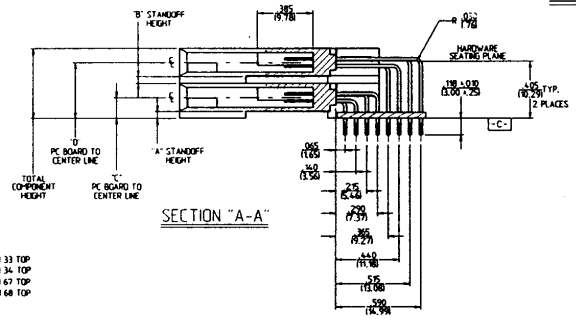

SECTION "A-A"

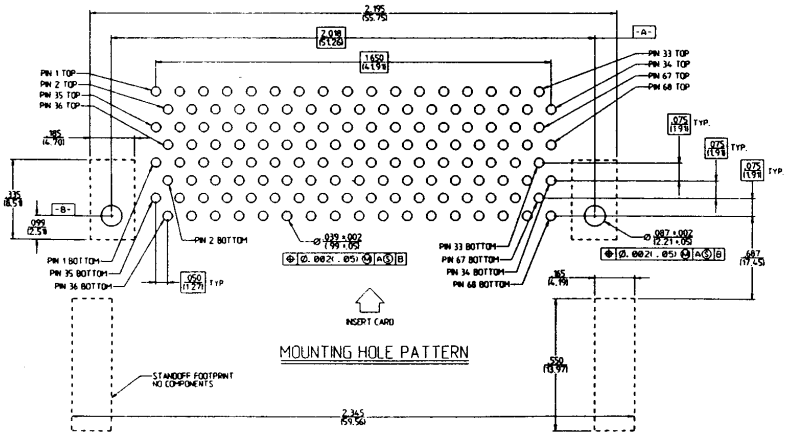

MOUNTING HOLE PATTERN

HEADER:
Power Pins, .197" (5.0mm) long: 1, 17, 34, 35, 51, 68
Signal Pins, 167" (4.24mm) long: 2-16, 18-33, 37-50, 52-66
Detect Pins, .137" (3.48mm) long: 36, 67

NOTES:

1. All dimensions are in inches. Metric equivalence in parentheses are for reference only.
2. All parts packaged in trays unless requested.
3. Available in bottom mount.
4. Acquire size M2(0-80 UNC) screws for hold down hardware.
5. Plated thru holes shall be linked to the PCB grounding path.

CUSTOMER DRAWING

Robinson Nugent
812/945-0211
812/945-0805 FAX

MEMPAK MCH136TAN21ATR30
136 Position, Top Mount, Right Angle Header
No Eject, No ESD, No Retent Clip, Stacked

MCH 136 T A N 21 A TR30

- MCH = MEMORY (CARD) HEADER
- NUMBER OF CONTACTS
- MOUNTING STYLES: T = TOP MOUNT, RIGHT ANGLE
- CONTACT STYLE: A = THRU HOLE
- HEADER STYLE: N = NO EJECT
- INSULATOR BODY STYLE: 21 = STANDARD, STACKED PROFILE
- ESD/SOLDER RETENT CLIP OPTION: A = NO ESD, NO SOLDER RETENT CLIP
- CONTACT PLATING: TR30

Downloaded from Elcodis.com electronic components distributor

PART DESCRIPTION	DIM "A" STANDOFF HEIGHT	DIM "B" STANDOFF HEIGHT	DIM "C" PC BOARD TO CENTER LINE	DIM "D" PC BOARD TO CENTER LINE	TOTAL COMPONENT HEIGHT
MCH136TAN21CTR30	.054 *(1.37)*	.047 *(1.20)*	.146 *(3.70)*	.397 *(10.08)*	.495 *(12.57)*

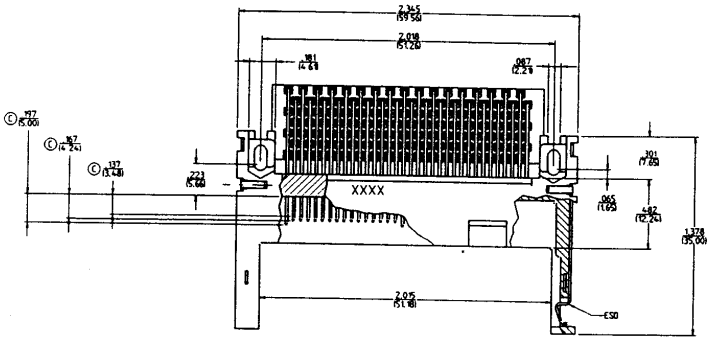

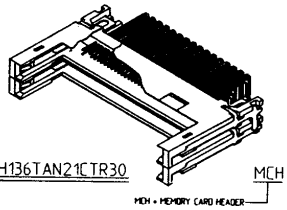

MCH136TAN21CTR30

MCH 136 T A N 21 C TR30

- MCH = MEMORY CARD HEADER
- NUMBER OF CONTACTS
- MOUNTING STYLES T = TOP MOUNT, RIGHT ANGLE
- CONTACT STYLE A = THRU HOLE
- HEADER STYLE N = NO EJECT
- INSULATOR BODY STYLE 21 = STANDARD, STACKED PROFILE
- ESD/SOLDER RETENT CLIP OPTION C = ESD, NO SOLDER RETENT CLIP
- CONTACT PLATING TR30

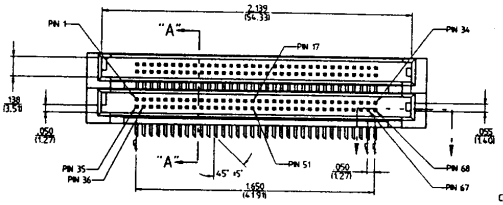

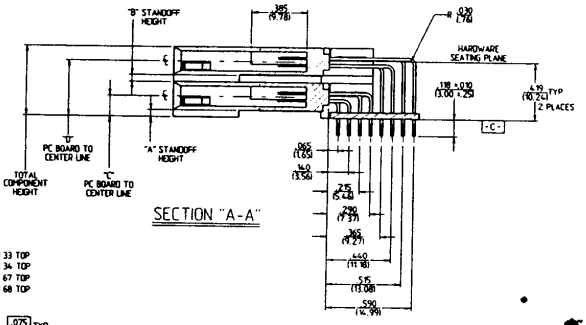

SECTION "A-A"

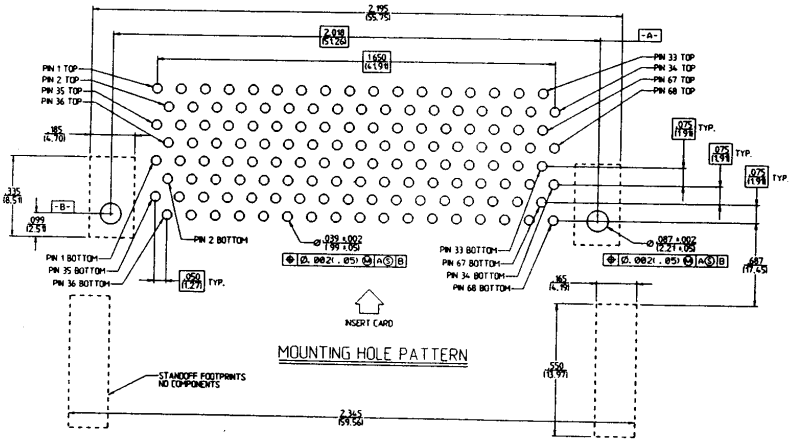

MOUNTING HOLE PATTERN

HEADER:
Power Pins, .197" (5.0mm) long: 1, 17, 34, 35, 51, 68
Signal Pins, 167" (4.24mm) long: 2-16, 18-33, 37-50, 52-66
Detect Pins, .137" (3.48mm) long: 36, 67

NOTES:
1. All dimensions are in inches. Metric equivalence in parentheses are for reference only.
2. All parts packaged in trays unless requested.
3. Available in bottom mount.
4. Acquire size M2(0-80 UNC) screws for hold down hardware.
5. Plated thru holes shall be linked to the PCB grounding path.

CUSTOMER DRAWING

Robinson Nugent
812/945-0211
812/945-0805 FAX

MEMPAK MCH136TAN21CTR30
136 Position, Top Mount, Right Angle Header
No Eject, with ESD, No Retent Clip, Stacked

RN MEMPAK

Downloaded from Elcodis.com electronic components distributor