MICRO SWITCH
FREEPORT ILLINOIS, U.S.A
A DIVISION OF HONEYWELL
FED. MFG. CODE 91929

SWITCH-BASIC

CATALOG LISTING
BE-R0512-A2

BE-R0512-A2
PAGE 1 OF 1

M

DRAWING NUMBER 6

ISSUE

REPLACES ~

RELEASE NO. PR-850

CHECK

REVISIONS

A	CO36627	21 AUG 67
B	CO36664	1 MAR 78
C	CO 58782	24 JAN 86
D	CO-73287-J	22 NOV 93
E	204994	11 MAR 02

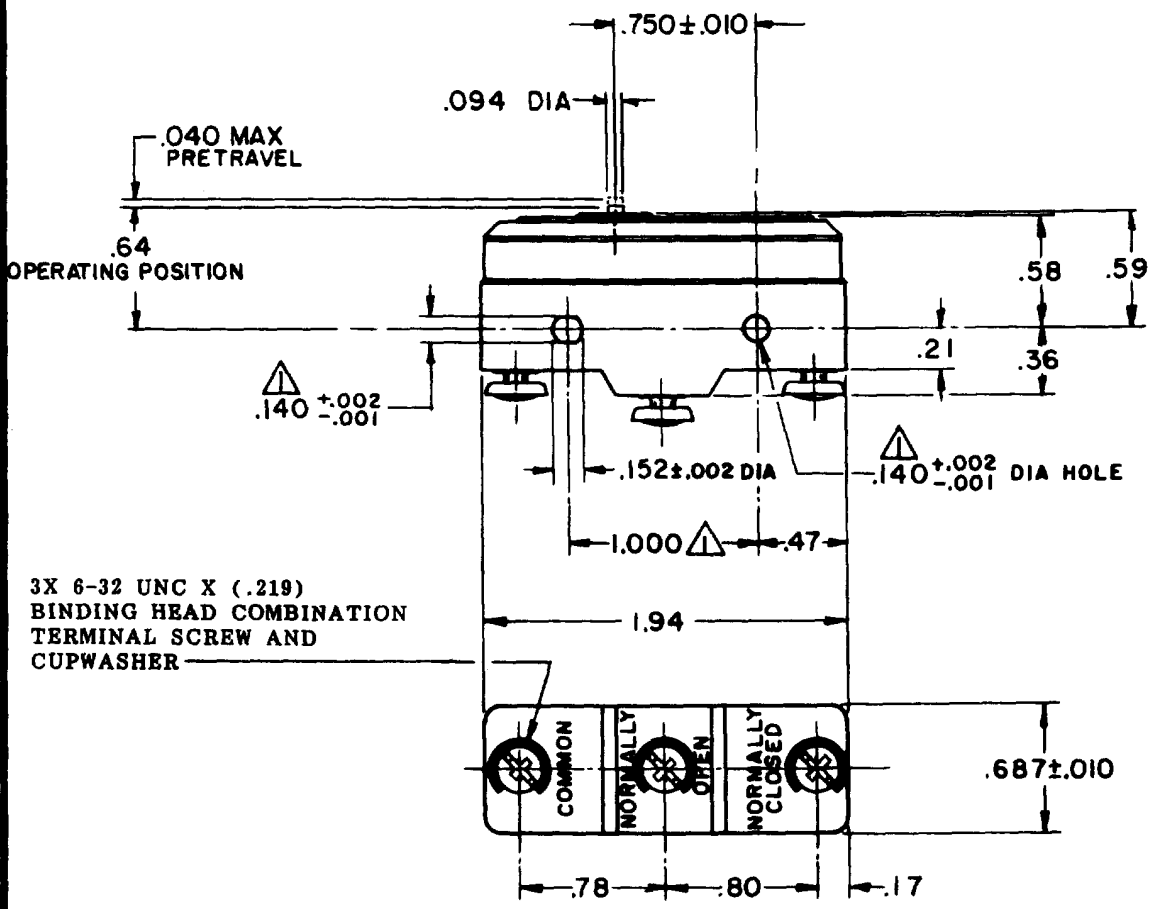

NOTE-
1. MOUNTING HOLES WILL ACCEPT PINS OR SCREWS OF .139 MAX DIA ON 1.000±.002 CENTERS
2. PLASTIC MATERIAL USED=
   CASE - - - - - - DUREZ 16274 OR EQUIVALENT (NORMALIZED)
   COVER - - - - - GE12983 OR. EQUIVALENT (NORMALIZED)
   PLUNGER - - - GE EF-4530 OR EQUIVALENT

THIS DRAWING COVERS A PROPRIETARY ITEM AND IS THE PROPERTY OF MICRO SWITCH, A DIVISION OF HONEYWELL. THIS DRAWING IS NOT TO BE COPIED OR USED WITHOUT THE APPROVAL OF MICRO SWITCH.

CHARACTERISTICS

OPERATING FORCE - - - - - 11-17 OZ
RELEASE FORCE - - - - - 10 OZ MIN
DIFFERENTIAL TRAVEL - - .0015-.0025
OVERTRAVEL - - - - - - - .010 MIN

ELECTRICAL DATA

CONTACT ARRANGEMENT
SPDT

25A-125, 250 OR 480 VAC
3/4 HP-125 VAC; 1½ HP-250 VAC
PILOT DUTY: 375 VA-125, OR 250 VAC
60/75°C (Cu)

SCALE FULL
DO NOT SCALE PRINT

UNLESS OTHERWISE NOTED
DIMENSIONS ARE IN INCHES
TOLERANCES ARE:

ONE PLACE	(.0)	±.030
TWO PLACE	(.00)	±.015
THREE PLACE	(.000)	±.005
ANGLES		±

WEIGHT .063 LB

DRAWN D L F 20 AUG 69
CHECK L S D 21 AUG 69
CHECK G H 21 AUG 69

RASTER
FO-50378-1A

Downloaded from Elcodis.com electronic components distributor