MICRO SWITCH
FREEPORT ILLINOIS U.S.A.
A DIVISION OF HONEYWELL
FED. MFG. CODE 81929

SMALL PRECISION LIMIT SWITCH

CATALOG LISTING
924CE16-S9

NOTES
1 - ZINC HOUSING FINISHED WITH GREY PAINT
2 - SWITCH WILL ACTUATE IN BOTH DIRECTIONS
3 - SWITCH PROVIDES BREAK BEFORE MAKE CIRCUITRY

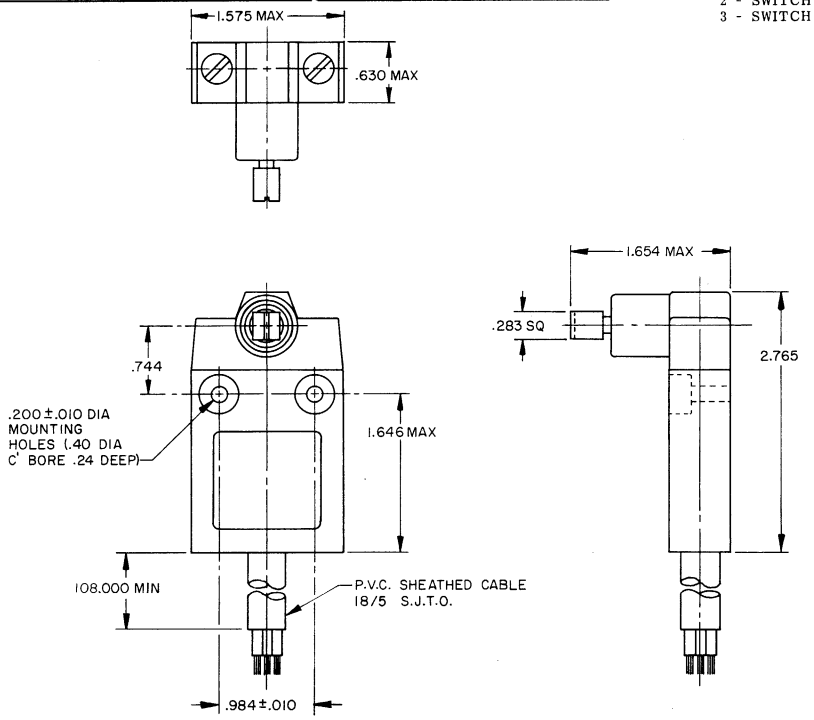

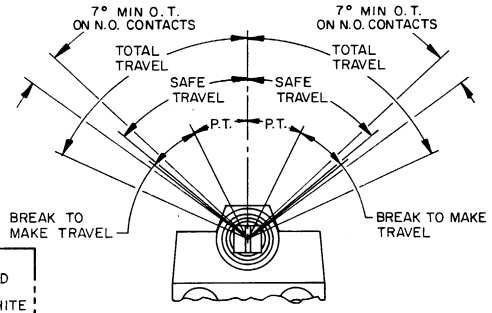

THIS DRAWING COVERS A PROPRIETARY ITEM AND IS THE PROPERTY OF MICRO SWITCH, A DIVISION OF HONEYWELL. THIS DRAWING IS NOT TO BE COPIED OR USED WITHOUT THE APPROVAL OF MICRO SWITCH.

CHARACTERISTICS	
OPERATING FORCE	2.62 IN. LB MAX
BREAK TO MAKE TRAVEL	25°±7°
PRETRAVEL	26° MAX
TOTAL TRAVEL	65° MIN
SAFE TRAVEL	50° MIN

ELECTRICAL DATA
CONTACT ARRANGEMENT
S P D T D B

10A - 250 VAC
1/3 HP 125 OR 250 VAC

SCALE FULL
DO NOT SCALE PRINT
TOLERANCES
APPLY TO DESIGN UNITS. CONVERSIONS ARE ONLY FOR REFERENCE. UNLESS NOTED TOLERANCES ARE ±

	DIM. mm	TOL. mm/in	DIM. in	TOL. mm/in
NO PLACES	X	1.0/.04	X	0.8/.03
ONE PLACE	X.X	0.4/.016	X.X	0.38/.015
TWO PLACES	X.XX	0.13/.005	X.XX	0.13/.005
THREE PLACES			X.XXX	0.13/.005
ANGLES				

DESIGN UNITS SI METRIC ☐ US CUSTOMARY ■
THIRD ANGLE PROJECTION
WEIGHT

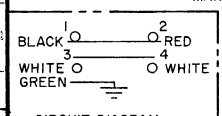

CIRCUIT DIAGRAM

DRAWN	T S K	5 DEC 88
CHECK		
CHECK		
CHECK		
CHECK		

REVISIONS

DRAWING NUMBER	ISSUE	RELEASE NO.	REPLACES
M 924CE16-S9	I	PR-16950	

FO-2281-B

Downloaded from Elcodis.com electronic components distributor