MICRO SWITCH
a Honeywell Division
FED. MFG. CODE 91929

# SWITCH - ENCLOSED

CATALOG LISTING
ML-1162

CIRCUIT DIAGRAM

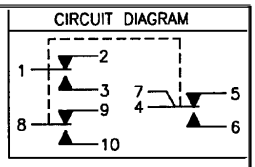


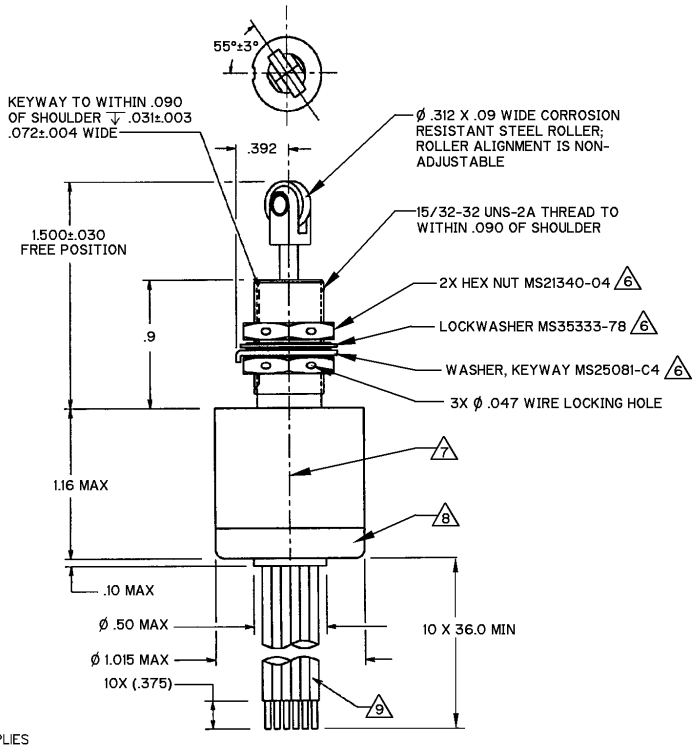


ANSI Y14.5M-1982 APPLIES

NOTES
1 - COINCIDENCE OF OPERATING AND RELEASING POINTS: .010 OF PLUNGER TRAVEL
2 - CORROSION RESISTANT STEEL ENCLOSURE, PLUNGER & ROLLER
3 - SWITCH SEALED PER MIL-PRF-8805 SYMBOL 3
4 - BASIC SWITCHES HAVE SOLID GOLD CONTACT MATERIAL
5 - SWITCH CURRENT LEVELS SHALL NOT BE MORE THAN 100 MILLIAMPS AT 28 VDC
6 HARDWARE MAY BE PACKAGED UNASSEMBLED PER MIL-PRF-8805
7 PRINT CIRCUIT DIAGRAM, CATALOG LISTING, DATE CODE AND CUSTOMER PART NO. D013526-503 (WITH CURRENT REVISION LETTER) ON NAMEPLATE
8 PLASTIC MATERIAL(S) SHALL CONFORM TO MIL-M-14 OR MIL-M-24519
9 10X MIL-W-22759/11-22-9 WIRE LEAD MARKED WITH CIRCUIT IDENTIFICATION AND WIRE GAGE (1-22, 2-22, ETC.) PER MIL-W-5088

THIS DRAWING COVERS A PROPRIETARY ITEM AND IS THE PROPERTY OF MICRO SWITCH. A DIVISION OF HONEYWELL. THIS DRAWING IS NOT TO BE COPIED OR USED WITHOUT THE APPROVAL OF MICRO SWITCH

THIRD ANGLE PROJECTION

SCALE 2:1

DO NOT SCALE PRINT

| CHARACTERISTICS | |
|---|---|
| OPERATING FORCE | 3 ± 1 LBS |
| FULL OVERTRAVEL FORCE | 7 LBS MAX |
| RELEASE FORCE | .5 LBS MIN |
| PRETRAVEL | .040 MAX |
| DIFFERENTIAL TRAVEL | .020 MAX |
| OVERTRAVEL | .125 MIN |

ELECTRICAL DATA

CONTACT ARRANGEMENT
3X SPDT

| LOAD (AMPS) | 28 VDC SEA LEVEL | 28 VDC 50,000 FT |
|---|---|---|
| RESISTIVE | 1 | 1 |
| INDUCTIVE | .5 | .5 |
| MOTOR | | — |

UNLESS OTHERWISE SPECIFIED TOLERANCES ARE

| | | |
|---|---|---|
| ONE PLACE | (.0) | ±.030 |
| TWO PLACE | (.00) | ±.015 |
| THREE PLACE | (.000) | ±.005 |
| ANGLES | | ± 4° |

WEIGHT

CATALOG LISTING ML-1162
PAGE 1 OF 1
RELEASE NO. PR-24240
REPLACES
ISSUE 1
REVISIONS
CHECK
CHECK
CHECK
DRAWN CSL 1 OCT 99
SAV 1 OCT 99
FORMTEK

Downloaded from Elcodis.com electronic components distributor