STB11NK50Z - STP11NK50ZFP
STP11NK50Z

N-channel 500 V, 0.48 Ω, 10 A TO-220, TO-220FP, D²PAK Zener-protected SuperMESH™ Power MOSFET

Features

Type	V_{DSS}	$R_{DS(on)}$ max	I_D	Pw
STB11NK50Z	500 V	< 0.52 Ω	10 A	125 W
STP11NK50ZFP	500 V	< 0.52 Ω	10 A	30 W
STP11NK50Z	500 V	< 0.52 Ω	10 A	125 W

- Extremely high dv/dt capability
- 100% avalanche tested
- Gate charge minimized
- Very low intrinsic capacitances

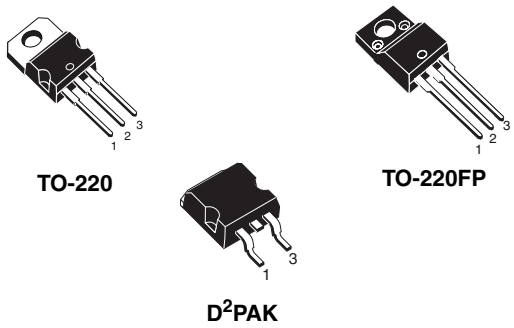

Application

- Switching applications

Description

The SuperMESH™ series is obtained through an extreme optimization of ST's well established strip-based PowerMESH™ layout. In addition to pushing on-resistance significantly down, special care is taken to ensure a very good dv/dt capability for the most demanding applications.

Figure 1. Internal schematic diagram

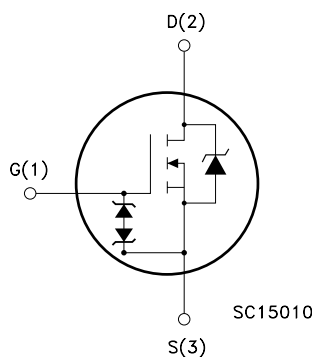

Table 1. Device summary

Order codes	Marking	Package	Packaging
STB11NK50ZT4	B11NK50Z	D²PAK	Tape and reel
STP11NK50ZFP	P11NK50ZFP	TO-220FP	Tube
STP11NK50Z	P11NK50Z	TO-220	Tube

Contents

1 Electrical ratings

Table 2. Absolute maximum ratings

Symbol	Parameter	Value		Unit
		TO-220 D²PAK	TO-220FP	
V_{DS}	Drain-source voltage (V_{GS} = 0)	500		V
V_{GS}	Gate-source voltage	± 30		V
I_D	Drain current (continuous) at T_C = 25 °C	10	10(1)	A
I_D	Drain current (continuous) at T_C=100 °C	6.3	6.3(1)	A
I_{DM}(2)	Drain current (pulsed)	40	40(1)	A
P_{TOT}	Total dissipation at T_C = 25 °C	125	30	W
	Derating factor	1	0.24	W/°C
$V_{ESD(G-S)}$	Gate source ESD (HBM-C= 100 pF, R= 1.5 kΩ)	4000		V
dv/dt(3)	Peak diode recovery voltage slope	4.5		V/ns
V_{ISO}	Insulation withstand voltage (DC)	--	2500	V
T_J T_{stg}	Operating junction temperature Storage temperature	-55 to 150		°C

1. Limited only by maximum temperature allowed
2. Pulse width limited by safe operating area
3. $I_{SD} \leq 10$ A, di/dt ≤ 200 A/µs, $V_{DD} \leq V_{(BR)DSS}$, $T_j \leq T_{JMAX}$.

Table 3. Thermal data

Symbol	Parameter	Value		Unit
		TO-220 D²PAK	TO-220FP	
$R_{thj-case}$	Thermal resistance junction-case max	1	4.2	°C/W
R_{thj-a}	Thermal resistance junction-ambient max	62.5		°C/W
T_l	Maximum lead temperature for soldering purpose	300		°C

Table 4. Avalanche characteristics

Symbol	Parameter	Value	Unit
I_{AS}	Avalanche current, repetitive or not-repetitive (pulse width limited by Tj max)	10	A
E_{AS}	Single pulse avalanche energy (starting T_J = 25 °C, I_D=I_{AR}, V_{DD} = 50 V)	190	mJ

2 Electrical characteristics

(T_{CASE} = 25 °C unless otherwise specified)

Table 5. On/off states

Symbol	Parameter	Test conditions	Min.	Typ.	Max.	Unit
$V_{(BR)DSS}$	Drain-source breakdown voltage	I_D = 1 mA, V_{GS}= 0	500			V
I_{DSS}	Zero gate voltage drain current (V_{GS} = 0)	V_{DS} = Max rating, V_{DS} = Max rating @125 °C			1 50	µA µA
I_{GSS}	Gate body leakage current (V_{DS} = 0)	V_{GS} = ±20 V			±10	µA
$V_{GS(th)}$	Gate threshold voltage	V_{DS}= V_{GS}, I_D = 100 µA	3	3.75	4.5	V
$R_{DS(on)}$	Static drain-source on resistance	V_{GS}= 10 V, I_D= 4.5 A		0.48	0.52	Ω

Table 6. Dynamic

Symbol	Parameter	Test conditions	Min.	Typ.	Max.	Unit
g_{fs} (1)	Forward transconductance	V_{DS} =15 V, I_D = 4.5 A		7.7		S
C_{iss} C_{oss} C_{rss}	Input capacitance Output capacitance Reverse transfer capacitance	V_{DS} =25 V, f=1 MHz, V_{GS}=0		1390 173 42		pF pF pF
$C_{oss\ eq}$(2).	Equivalent output capacitance	V_{GS}=0, V_{DS} =0 to 400 V		110		pF
Q_g Q_{gs} Q_{gd}	Total gate charge Gate-source charge Gate-drain charge	V_{DD}=400 V, I_D = 11.4 A V_{GS} =10 V *(see Figure 18)*		49 10 25	68	nC nC nC

1. Pulsed: pulse duration=300µs, duty cycle 1.5%
2. $C_{oss\ eq.}$ is defined as a constant equivalent capacitance giving the same charging time as C_{oss} when V_{DS} increases from 0 to 80% V_{DSS}

Table 7. Switching times

Symbol	Parameter	Test conditions	Min.	Typ.	Max.	Unit
$t_{d(on)}$ t_r	Turn-on delay time Rise time	V_{DD}= 250 V, I_D=5.5 A, R_G= 4.7 Ω, V_{GS}=10 V *(see Figure 19)*		14.5 18		ns ns
$t_{d(off)}$ t_f	Turn-off delay time Fall time	V_{DD} = 250 V, I_D=5.5 A, R_G = 4.7 Ω, V_{GS}=10 V *(see Figure 19)*		41 15		ns ns
$t_{r(Voff)}$ t_f t_c	Off-voltage rise time Fall time Cross-over time	V_{DD}=400 V, I_D=11.4 A, R_G=4.7 Ω, V_{GS}=10 V *(see Figure 19)*		11.5 12 27		ns ns ns

Table 8. Source drain diode

Symbol	Parameter	Test conditions	Min	Typ.	Max	Unit
I_{SD}	Source-drain current				10	A
I_{SDM}(1)	Source-drain current (pulsed)				40	A
V_{SD}(2)	Forward on voltage	I_{SD}=10 A, V_{GS}=0			1.6	V
t_{rr} Q_{rr} I_{RRM}	Reverse recovery time Reverse recovery charge Reverse recovery current	I_{SD}=10 A, di/dt = 100 A/µs, V_{DD}=45 V, Tj=150 °C		308 2.4 16		ns µC A

1. Pulse width limited by safe operating area
2. Pulsed: pulse duration=300µs, duty cycle 1.5%

Table 9. Gate-source Zener diode

Symbol	Parameter	Test conditions	Min.	Typ.	Max.	Unit
BV_{GSO}(1)	Gate-source breakdown voltage	Igs=±1mA (open drain)	30			V

1. The built-in back-to-back Zener diodes have specifically been designed to enhance not only the device's ESD capability, but also to make them safely absorb possible voltage transients that may occasionally be applied from gate to source. In this respect the Zener voltage is appropriate to achieve an efficient and cost-effective intervention to protect the device's integrity. These integrated Zener diodes thus avoid the usage of external components.

2.1 Electrical characteristics (curves)

Figure 2. Safe operating area for TO-220 / D²PAK

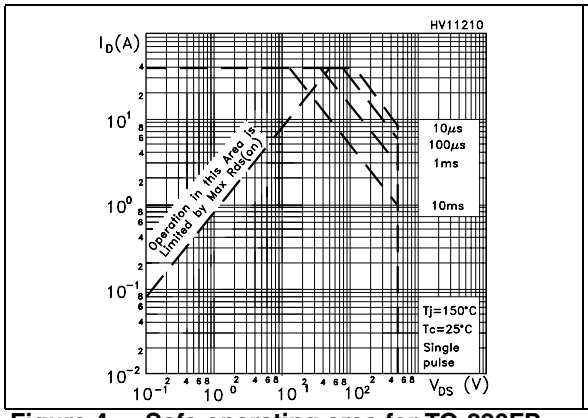

Figure 3. Thermal impedance for TO-220 / D²PAK

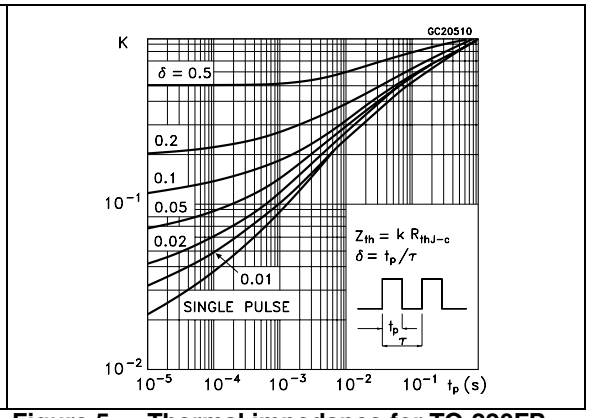

Figure 4. Safe operating area for TO-220FP

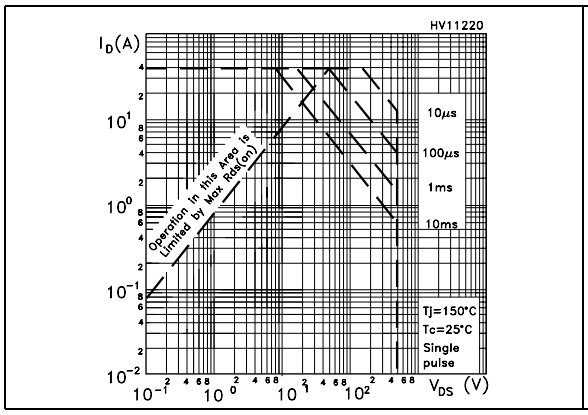

Figure 5. Thermal impedance for TO-220FP

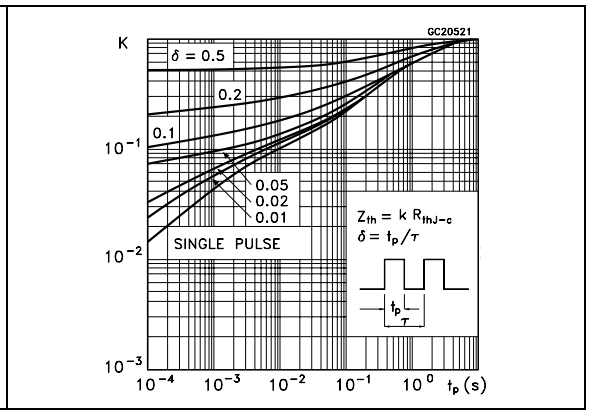

Figure 6. Output characteristics

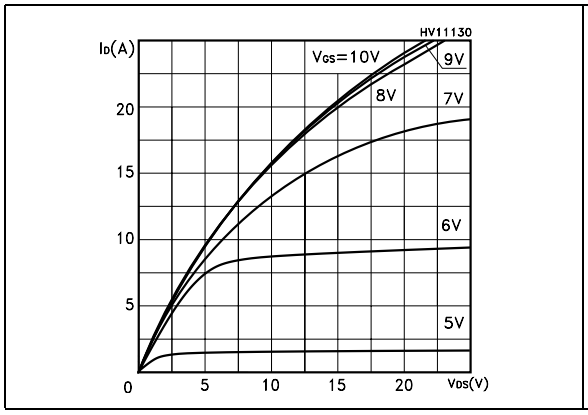

Figure 7. Transfer characteristics

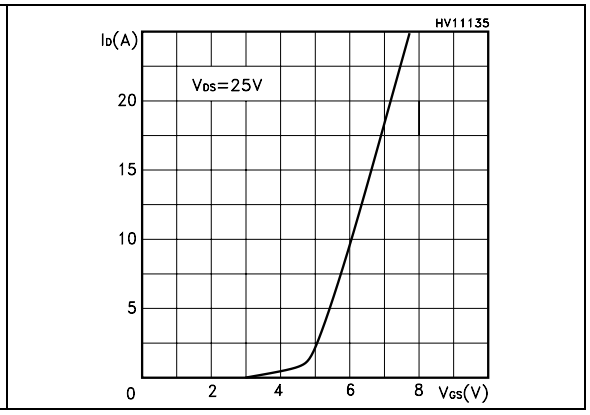

Figure 8. Transconductance

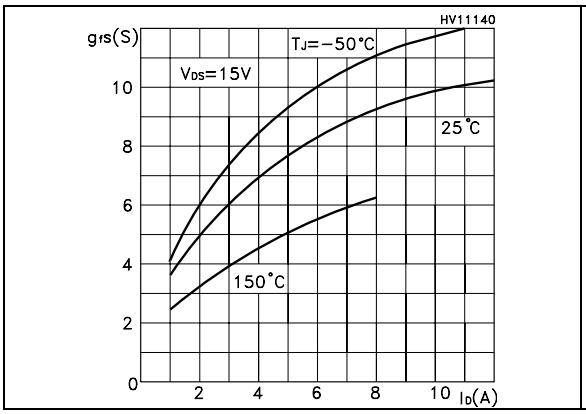

Figure 9. Static drain-source on resistance

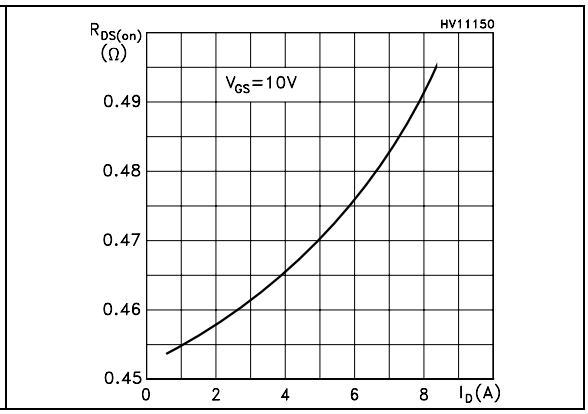

Figure 10. Gate charge vs gate-source voltage

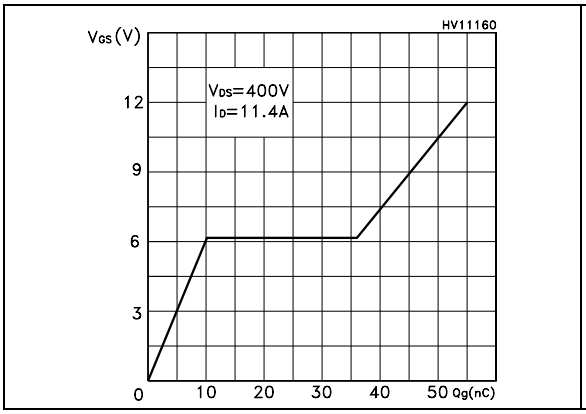

Figure 11. Capacitance variations

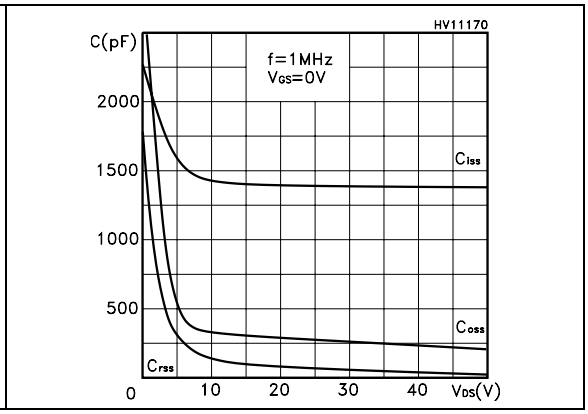

Figure 12. Normalized gate threshold voltage vs temperature

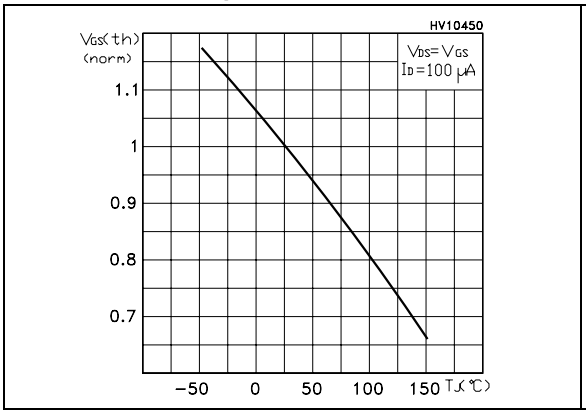

Figure 13. Normalized on resistance vs temperature

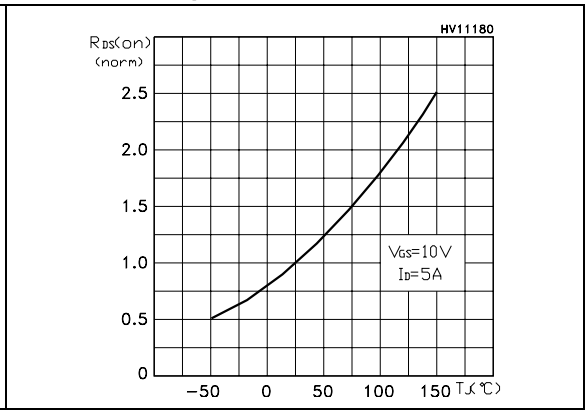

Figure 14. Source-drain diode forward characteristics

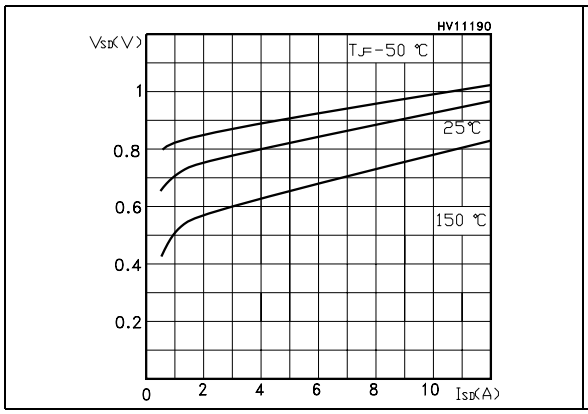

Figure 15. Normalized B_{VDSS} vs temperature

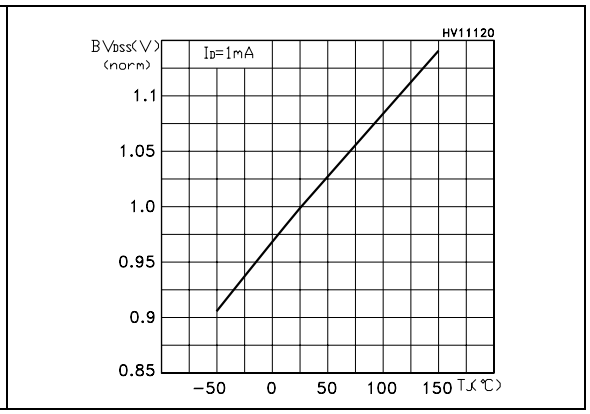

Figure 16. Maximum avalanche energy vs temperature

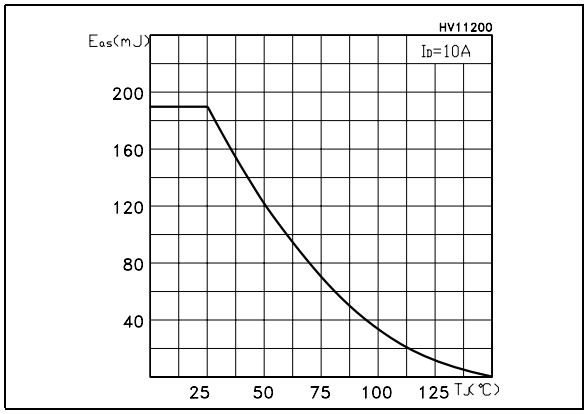

3 Test circuit

Figure 17. Switching times test circuit for resistive load

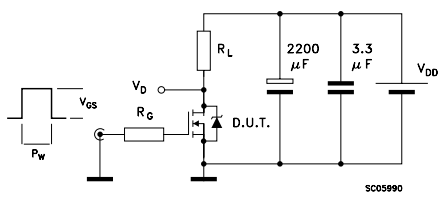

Figure 18. Gate charge test circuit

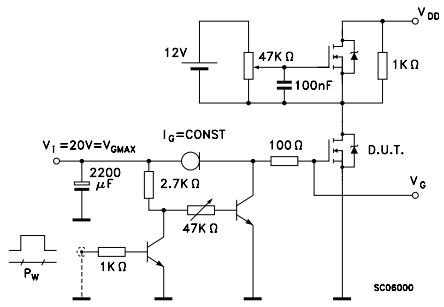

Figure 19. Test circuit for inductive load switching and diode recovery times

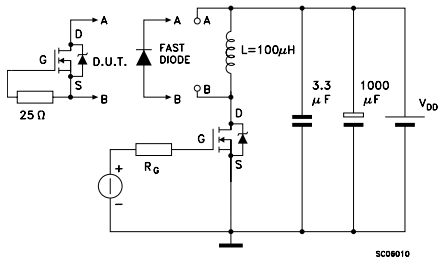

Figure 20. Unclamped Inductive load test circuit

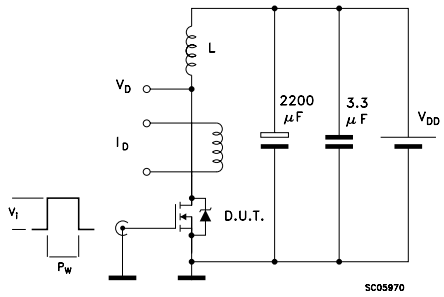

Figure 21. Unclamped inductive waveform

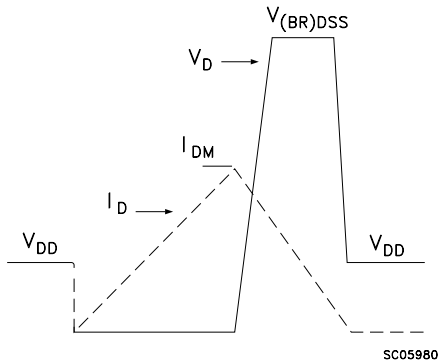

Figure 22. Switching time waveform

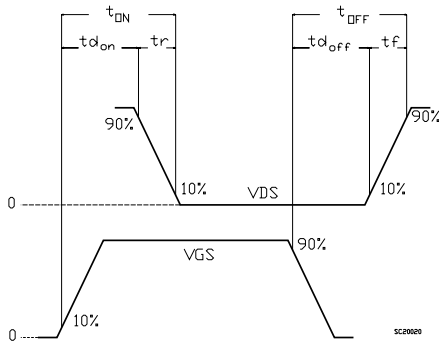

4 Package mechanical data

In order to meet environmental requirements, ST offers these devices in ECOPACK® packages. These packages have a lead-free second level interconnect. The category of second level interconnect is marked on the package and on the inner box label, in compliance with JEDEC Standard JESD97. The maximum ratings related to soldering conditions are also marked on the inner box label. ECOPACK is an ST trademark. ECOPACK specifications are available at: www.st.com

TO-220 mechanical data

Dim	mm			inch		
	Min	Typ	Max	Min	Typ	Max
A	4.40		4.60	0.173		0.181
b	0.61		0.88	0.024		0.034
b1	1.14		1.70	0.044		0.066
c	0.48		0.70	0.019		0.027
D	15.25		15.75	0.6		0.62
D1		1.27			0.050	
E	10		10.40	0.393		0.409
e	2.40		2.70	0.094		0.106
e1	4.95		5.15	0.194		0.202
F	1.23		1.32	0.048		0.051
H1	6.20		6.60	0.244		0.256
J1	2.40		2.72	0.094		0.107
L	13		14	0.511		0.551
L1	3.50		3.93	0.137		0.154
L20		16.40			0.645	
L30		28.90			1.137	
∅P	3.75		3.85	0.147		0.151
Q	2.65		2.95	0.104		0.116

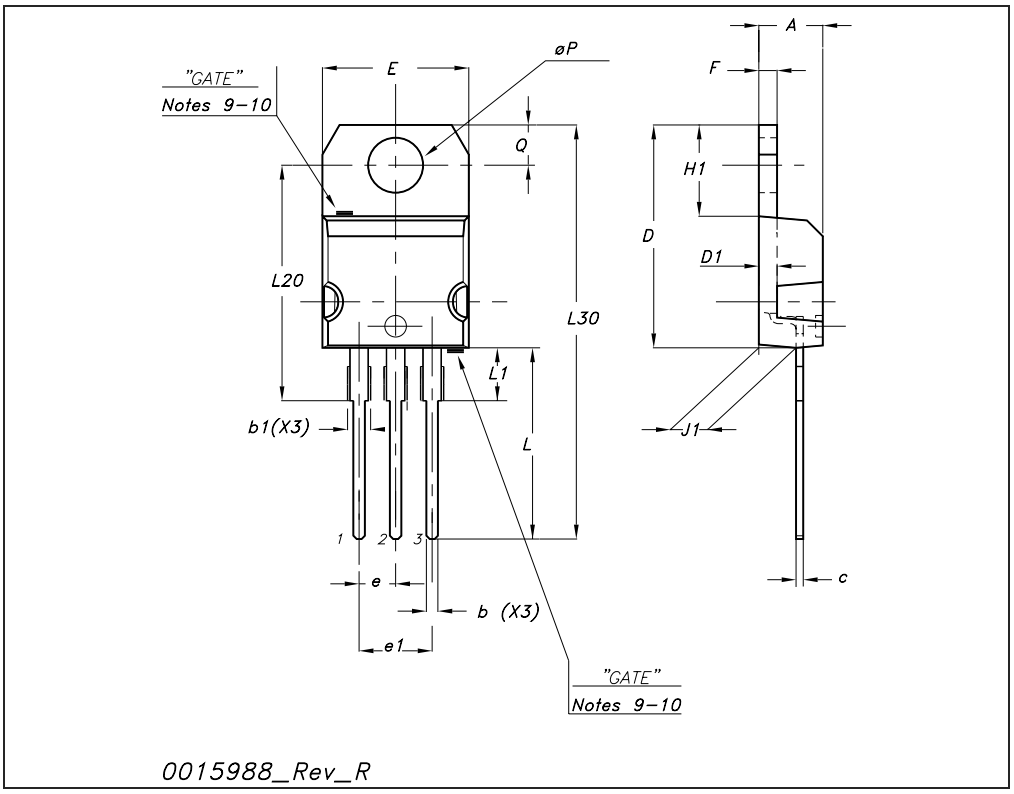

TO-220FP mechanical data

Dim.	mm.			inch		
	Min.	Typ	Max.	Min.	Typ.	Max.
A	4.40		4.60	0.173		0.181
B	2.5		2.7	0.098		0.106
D	2.5		2.75	0.098		0.108
E	0.45		0.70	0.017		0.027
F	0.75		1.00	0.030		0.039
F1	1.15		1.50	0.045		0.067
F2	1.15		1.50	0.045		0.067
G	4.95		5.20	0.195		0.204
G1	2.40		2.70	0.094		0.106
H	10		10.40	0.393		0.409
L2		16			0.630	
L3	28.6		30.6	1.126		1.204
L4	9.80		10.60	0.385		0.417
L5	2.9		3.6	0.114		0.141
L6	15.90		16.40	0.626		0.645
L7	9		9.30	0.354		0.366
Dia	3		3.2	0.118		0.126

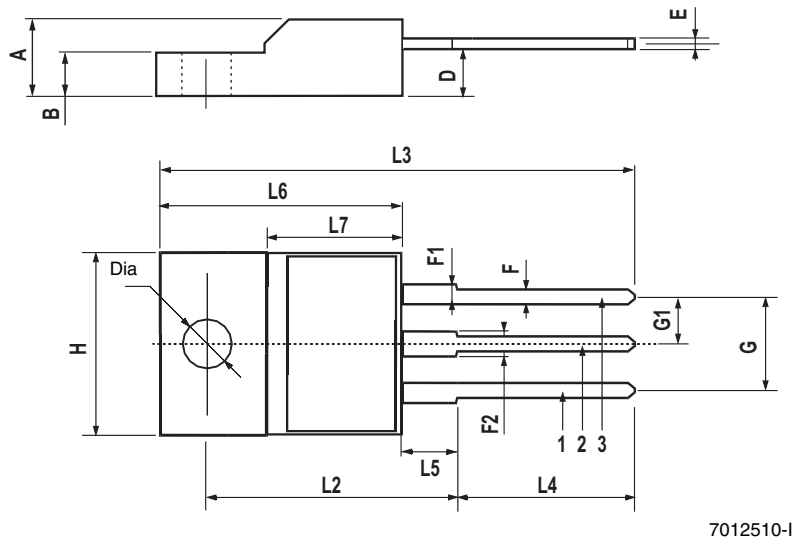

D²PAK (TO-263) mechanical data

Dim	mm			inch		
	Min	Typ	Max	Min	Typ	Max
A	4.40		4.60	0.173		0.181
A1	0.03		0.23	0.001		0.009
b	0.70		0.93	0.027		0.037
b2	1.14		1.70	0.045		0.067
c	0.45		0.60	0.017		0.024
c2	1.23		1.36	0.048		0.053
D	8.95		9.35	0.352		0.368
D1	7.50			0.295		
E	10		10.40	0.394		0.409
E1	8.50			0.334		
e		2.54			0.1	
e1	4.88		5.28	0.192		0.208
H	15		15.85	0.590		0.624
J1	2.49		2.69	0.099		0.106
L	2.29		2.79	0.090		0.110
L1	1.27		1.40	0.05		0.055
L2	1.30		1.75	0.051		0.069
R		0.4			0.016	
V2	0°		8°	0°		8°

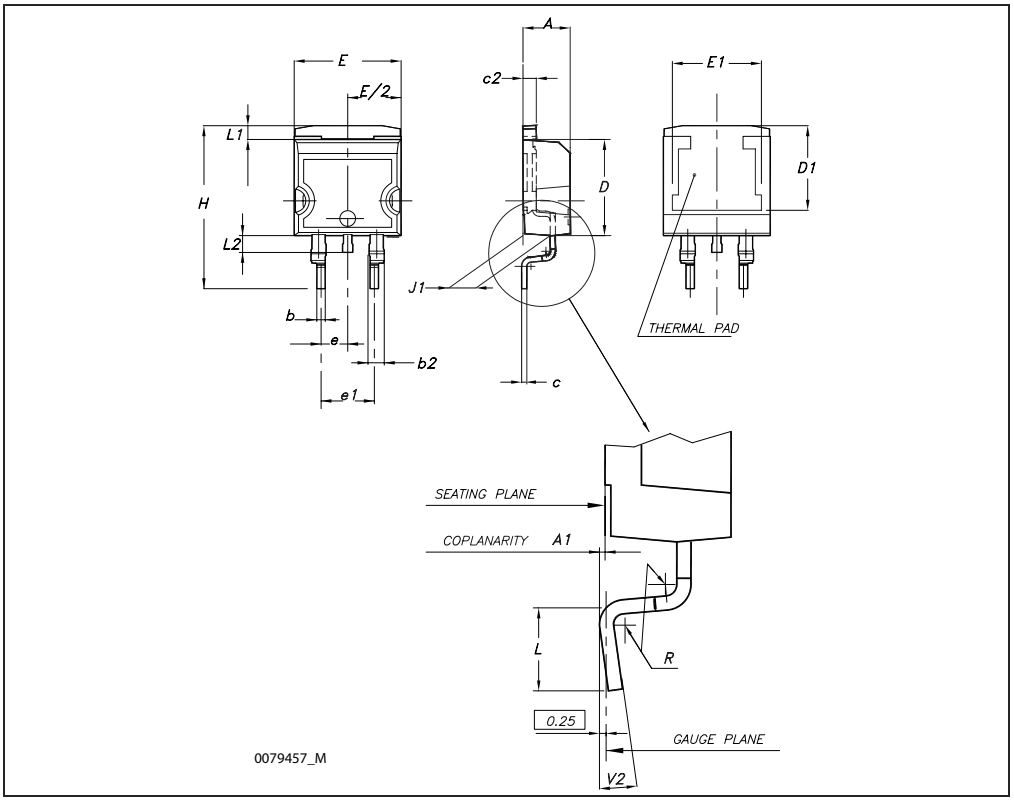

5 Packaging mechanical data

D²PAK FOOTPRINT

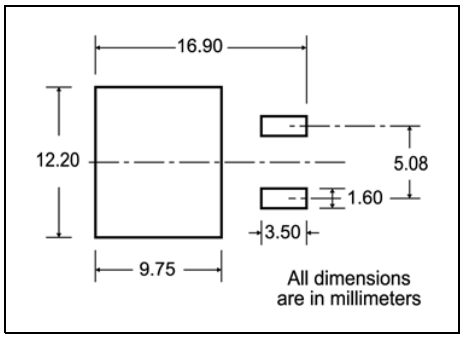

TAPE AND REEL SHIPMENT

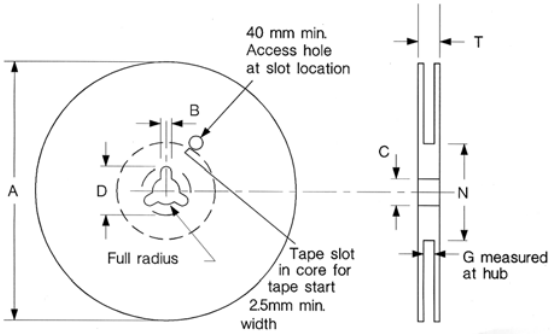

REEL MECHANICAL DATA

DIM.	mm		inch	
	MIN.	MAX.	MIN.	MAX.
A		330		12.992
B	1.5		0.059	
C	12.8	13.2	0.504	0.520
D	20.2		0795	
G	24.4	26.4	0.960	1.039
N	100		3.937	
T		30.4		1.197

BASE QTY	BULK QTY
1000	1000

TAPE MECHANICAL DATA

DIM.	mm		inch	
	MIN.	MAX.	MIN.	MAX.
A0	10.5	10.7	0.413	0.421
B0	15.7	15.9	0.618	0.626
D	1.5	1.6	0.059	0.063
D1	1.59	1.61	0.062	0.063
E	1.65	1.85	0.065	0.073
F	11.4	11.6	0.449	0.456
K0	4.8	5.0	0.189	0.197
P0	3.9	4.1	0.153	0.161
P1	11.9	12.1	0.468	0.476
P2	1.9	2.1	0.075	0.082
R	50		1.574	
T	0.25	0.35	0.0098	0.0137
W	23.7	24.3	0.933	0.956

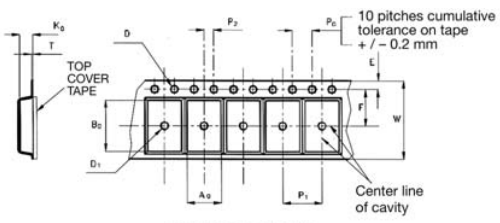

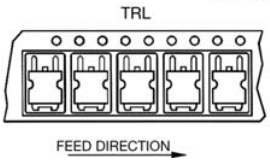

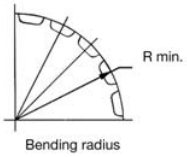

* on sales type

6 Revision history

Table 10. Revision history

Date	Revision	Changes
08-Sep-2005	3	Complete version with curves
14-Oct-2005	4	Inserted ecopack indication
26-Mar-2006	5	New template, no content change
29-Apr-2008	6	I_{GSS} value changed in *Table 6*