Crystal Units
Surface Mount Type CX3225SB (CX-101F)

KYOCERA

3.2×2.5mm for Mobile Communications

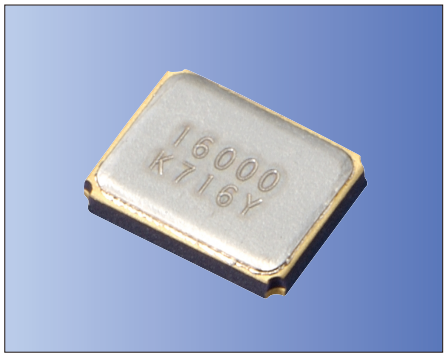

RoHS Compliant

Features

- Reference frequency for telecommunication systems
- Reflow compatible
- Using ceramic package resulting in high reliability
- Small and low profile

Applications

- Mobile Communications, Bluetooth, Wireless LAN

How to Order

CX3225SB 26000 □□ □ □ □ □□
① ② ③ ④ ⑤ ⑥ ⑦

① Series
② Frequency
③ Load Capacitance

B0	6 pF	—
D0	8 pF	Std.
F0	10 pF	—

④ Frequency Stability

F	$\pm10\times10^{-6}$	Std.
G	$\pm15\times10^{-6}$	—

⑤ Operating Temp. Range ⑥ Frequency Temp. Stability

FF	−20 to +70°C	$\pm10\times10^{-6}$	—
LJ	−30 to +85°C	$\pm15\times10^{-6}$	Std.

⑦ Individual Specification

Packaging (Tape & Reel 3000/ 1000 pcs./ reel)

Specifications

Item	Symbol	Specification	Units	Remarks
Frequency Range	f_{nom}	12000 to 54000	kHz	
Overtone Order	OT	Fundamental	—	
Load Capacitance	CL	8	pF	
Frequency Stability	f_{tol}	±10	$\times10^{-6}$	25°C±3°C
Motional Series Resistance	R1	Table 1	ohm	
Drive Level	DL	Table 2	µW	
Operating Temp. Range	T_{use}	−30 to +85	°C	
Storage Temp. Range	T_{stg}	−40 to +85	°C	
Frequency Temp. Characteristics	f_{tem}	±15	$\times10^{-6}$	Freq. deviation from the value at 25°C

* Please contact us for other specifications.

Typical Frequencies and Part Numbers

Frequency (kHz)	Part Number
12000.000	CX3225SB12000D0FLJZ1
13000.000	CX3225SB13000D0FLJZ1
13560.000	CX3225SB13560D0FLJZ1
16000.000	CX3225SB16000D0FLJZ1
19200.000	CX3225SB19200D0FLJZ1
20000.000	CX3225SB20000D0FLJZ1
26000.000	CX3225SB26000D0FLJZ1
32000.000	CX3225SB32000D0FLJZ1
38400.000	CX3225SB38400D0FLJZ1
40000.000	CX3225SB40000D0FLJZ1

Table1 Motional Series Resistance

Frequency Range	Motional Series Resistance
12000 to 12999kHz	200Ω max.
13000 to 14999kHz	150Ω max.
15000 to 15999kHz	100Ω max.
16000 to 19999kHz	80Ω max.
20000 to 26999kHz	50Ω max.
27000 to 54000kHz	40Ω max.

Table2 Level of Drive

Frequency Range	Level of Drive
12000 to 54000kHz	10µW (100µW max.)

Dimensions

(Unit: mm)

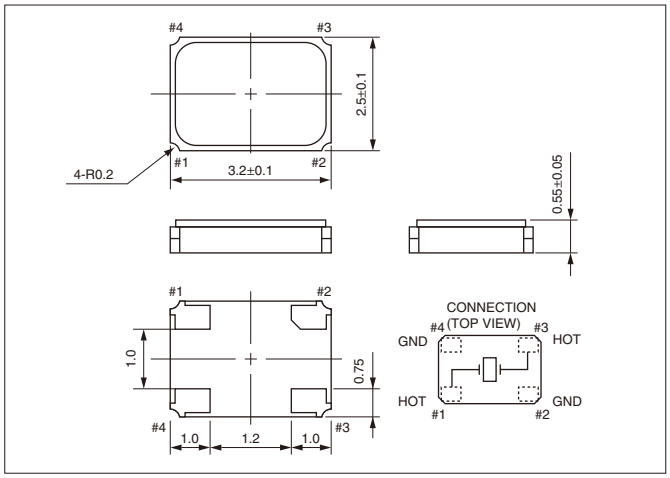

Recommended Land Pattern
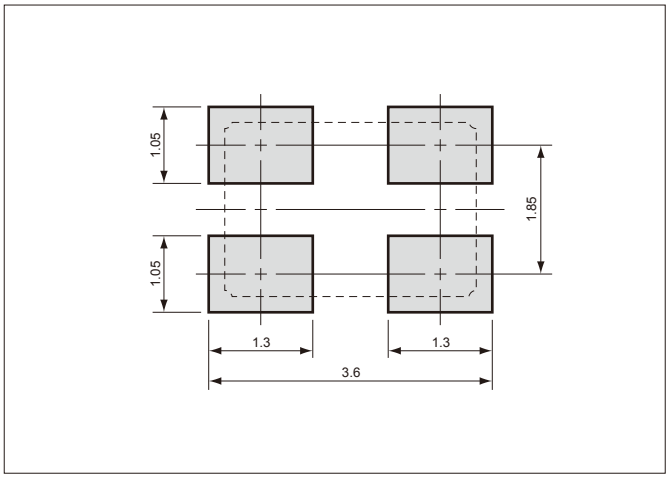
(Unit: mm)