Tous droits strictement reserves. Reproduction ou communication a des tiers interdite sous quelque forme que ce soit sans autorisation ecrite du propietaire. Propriete de c FCI. Droits de reproduction FCI.

All rights strictly reserved. Reproduction or issue to third parties in any form whatever is not permitted without written authority from the proprietor. Property of FCI. Copyright FCI.

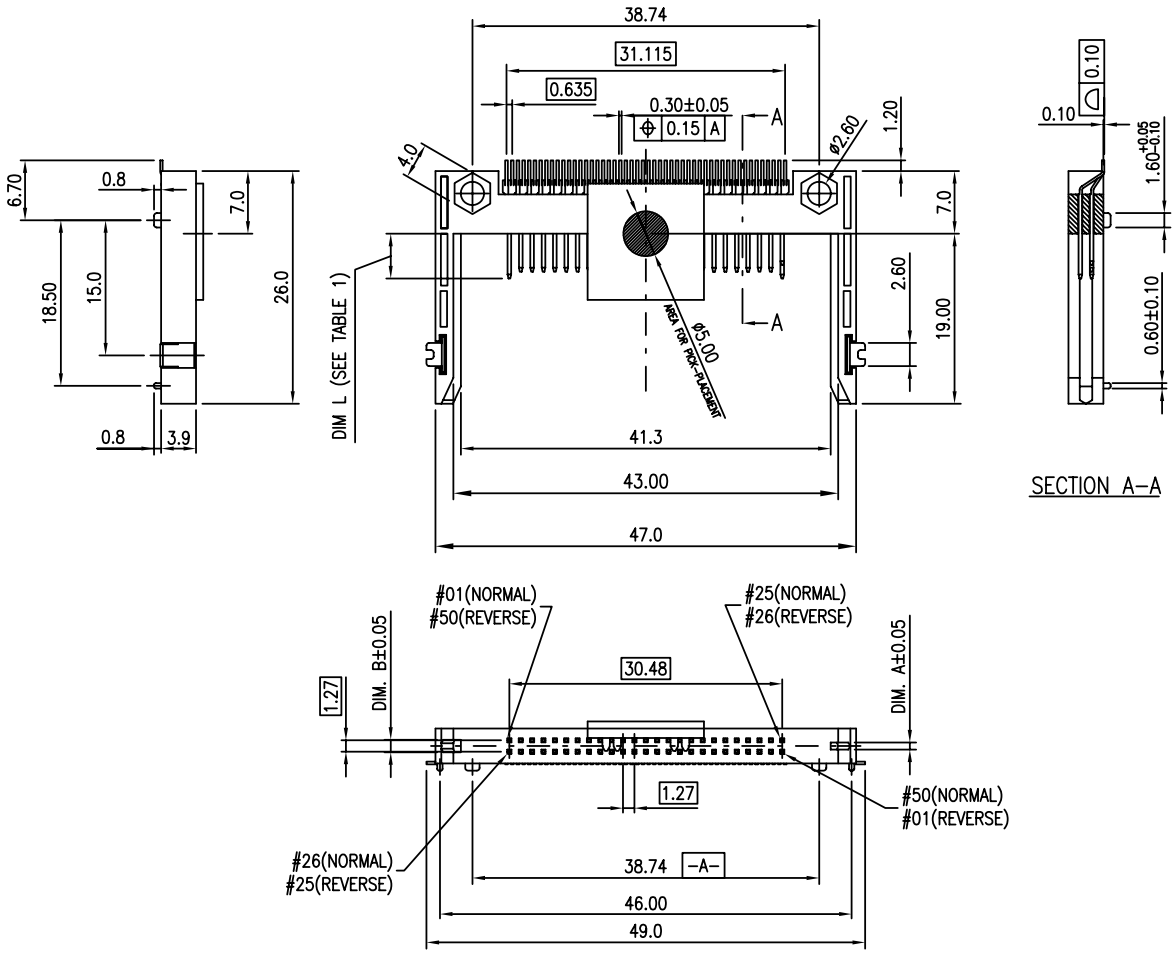

TABLE–1		
Pin Type	Interface Dim.(In.)	Pin No.
Detect	3.50 mm (0.138 In.)	25,26
General	4.25 mm (0.167 In.)	The others
Power	5.00 mm (0.197 In.)	01,13,38,50

TABLE–2		
PART NUMBERS	DIM. A	DIM. B
10038393–X050 Normal Type	0.80	1.40
10038393–X150 Reverse Type	1.40	0.80

Tolerance=±0.05

mat'l. code				tolerances unless otherwise specified		
ltr	ecn no	dr	date		.X ±.38	
A	T04–0327	J.H	7/16/04'	linear	.XX ±.25	
B	T04–0384	A.C.	10/06/04		.XXX ±.10	
C	T05–0057	A.C.	4/13/05	angles	0° ±2°	
				dr	JASON HSU	2/23/04'
				engr	JASON HSU	2/23/04'
				chr	STERLING LIN	2/23/04'
				appd	JAMES HSU	2/23/04'
sheet index	revision	C	C			
	sheet	1	2			

CUSTOMER COPY

projection

MM

scale N/A

FCI www.fciconnect.com

title CF CARD HEADER SLIM TYPE

product family CF

size A4 dwg no 10038393

code –

sheet 1 of 2

cage code 22526

ACAD

PDM: Rev:C STATUS Released Printed: Oct 14, 2008

Downloaded from Elcodis.com electronic components distributor

Tous droits strictement reserves. Reproduction ou communication a des tiers interdite sous quelque forme que ce soit sans autorisation ecrite du propietaire. Propriete de c FCI. Droits de reproduction FCI.

All rights strictly reserved. Reproduction or issue to third parties in any form whatever is not permitted without written authority from the proprietor. Property of FCI. Copyright FCI.

NOTES:

1. MATERIAL:
   HOLD DOWN: COPPER ALLOY.
   HOUSING: HIGH TEMPERATURE THERMOPLASTIC.
   UL 94V-0 RATED.
   TERMINAL: COPPER ALLOY.
2. TIN/LEAD PLATING SPEC:
   HOLD DOWN : TIN/LEAD PLATED WITH 100u" MIN., OVER 50u" MIN. NICKEL UNDERPLATED.
   TERMINAL : 50u"MIN. NICKEL UNDERPLATED OVER ALL 100u" MIN. TIN/LEAD PLATED IN SOLDERING AREA, SELECTIVE GOLD PLATED IN CONTACT AREA.
3. LEAD-FREE PLATING SPEC:
   HOLD DOWN : PURE MATTE TIN PLATED WITH 100u" MIN., OVER 50u" MIN. NICKEL UNDERPLATED.
   TERMINAL : 50u"MIN. NICKEL UNDERPLATED OVER ALL 100u" MIN. PURE MATTE TIN PLATED IN SOLDERING AREA, SELECTIVE GOLD PLATED IN CONTACT AREA.
4. THE HOUSING WILL WITHSTAND EXPOSURE TO 260 DEGREE C PEAK TEMPERATURE FOR 10 SECONDS IN A CONVECTION, INFRA-RED OR VAPOR PHASE REFLOW OVEN.
5. PRODUCT SPEC NO: GS-12-240.
   PACKAGE SPEC NO: GS-14-961.
6. THIS PRODUCT (10038393-XXXXXXLF) MEETS THE EUROPEAN UNION DIRECTIVE AS DESCRIBED IN GS-22-008, SUB CLAUSE 3.1 (DIRECTIVE 2002/95/EC).
7. PART NUMBER DESCRIPTION:

10038393-X X 50 X X X

- LEAD-FREE PLATING OPTION:
  BLANK: TIN/LEAD PLATING SPEC (SEE NOTE 2).
  LF: LEAD-FREE PLATING SPEC (SEE NOTE 3).
- PICK-UP CAP OPTION:
  BLANK: WITHOUT PICK-UP CAP.
  P: WITH PICK-UP CAP.
- PACKAGING METHOD:
  BLANK: PVC TRAY.
  T: TAPE & REEL(ONLY FOR THE PART WITH PICK-UP CAP)
- KEY TYPE, SEE TABLE-2.
  0: NORMAL TYPE
  1: REVERSE TYPE
- CONTACT AREA PLATING:
  D: 15u" GOLD.
  E: 30u" GOLD.

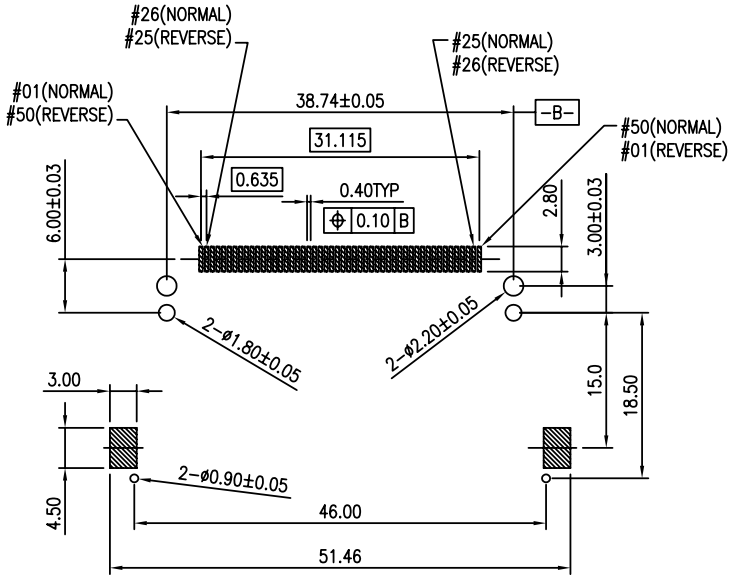

RECOMMENDED P.C.B. LAYOUT(General Tolerance±0.05)

mat'l. code				tolerances unless otherwise specified			CUSTOMER COPY	FCI www.fciconnect.com	
ltr	ecn no	dr	date	linear	.X ±.38				
C					.XX ±.25		projection	title	
					.XXX ±.10			CF CARD HEADER SLIM TYPE	
				angles	0° ±2°				
				dr	JASON HSU	2/23/04'	MM	product family CF	code –
				engr	JASON HSU	2/23/04'		size A4 dwg no 10038393	sheet 2 of 2
				chr	STERLING LIN	2/23/04'	scale N/A		
				appd	JAMES HSU	2/23/04'			
sheet index	revision	C	C						
	sheet	1	2						

cage code 22526

ACAD

Printed: Oct 14, 2008
STATUS Released
PDM: Rev:C

Downloaded from Elcodis.com electronic components distributor