PRODUCT NO.
52366-100DAS/100DASLF

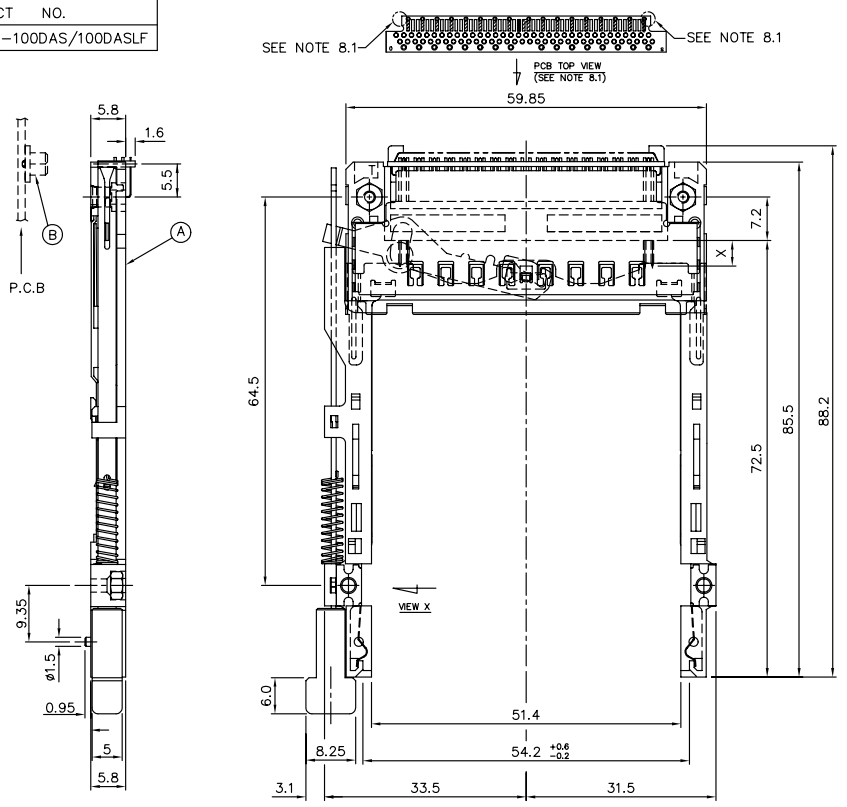

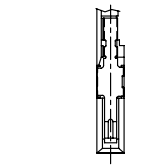

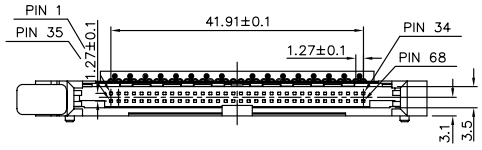

NOTES:
1. 8.0mm MIN CARD EJECT.
2. EJECT TRAVEL: 9.50mm
3. MATERIAL:
   EJECT HEADER ASS'Y
   PLASTIC HOUSING: LCP UL94V-0 BLACK
   PIN: COPPER ALLOY
   PCB: FR4
   PLASTIC GUIDE: POLYPHTHARAMID UL94V-0 COLOR : BLACK.
   PLATE: STAINLESS
   EMI CONTACT: PHOSPHOR BRONZE
4. FINISH
   PIN :
   UNDER PLATING: 0.5um MIN. Ni
   CONTACT AREA: 0.1um MIN. GOLD OVER
   0.5um MIN. Pd-Ni
   SOLDER TAIL(TIN LEAD OPTION): 2.5um MIN. Sn-Pb
   SOLDER TAIL(LEAD FREE OPTION): 2.5um MIN. PURE TIN
   GROUND SHIELD :
   UNDER PLATING: 0.75um MIN. Ni
   CONTACT SURFACE: 0.2 um GOLD.
5. PUSH ROD LOCATION AND P.C.B. ARE AS APPEARS INSTALLED
6. DIM "X"

4.25±0.1	3.5±0.1	5.0±0.1
OTHERS	36,67	1,17,34,35,51,68

7. DO NOT TOUCH AND KEEP CLEAN THE SURFACES OF PCB OF HEADER ASS'Y.
8. SPECIAL FEATURES:
   8.1 NO CHAMFER OF VTB
   8.2 NO "S"-SLOT
9. IF LEAD FREE P.N.THE HOUSING WILL WITHSTAND EXPOSURE TO 260°C PEAK TEMPERATURE FOR 10 SECONDS IN A WAVE SOLDER APPLICATION WITH A 1.00MM MINIMUM THICK CIRCUIT BOARD.
10. IF LEAD FREE P/N.THE PRODUCT MEETS EUROPEAN UNION DIRECTIVES AND OTHER COUNTRY REGULATIONS AS DISCRIBLED IN GS-22-008
11. LEAD FREE P/N PACKAGING MEETS GS-14-920 SPECIFICATION

ORDERING INFORMATION

NAME	PART NO.	Q'TY
(A) EJECT HEADER ASS'Y	52366-100DAS/100DASLF	1
(B) MATING RECEPTACLE	73277-101002/101002LF	1

rev.	ecn no.	dr	date
A	T90248	WL	07/06/99
B	T90287	WL	08/03/99
C	T90359	WL	10/14/99
D	T00105	WL	04/11/00
E	T10151	WL	05/28/01
F	N05-0037	WB	02/16/05

mat'l code

tolerance unless otherwise specified: linear ± 0.30; angles ± 2°

dr	WENDY CHEN	06/25/99
engr	STELAR CHU	06/25/99
chr	JOSEPH HSIA	06/25/99
appd	JENN TSAO	06/25/99

CUSTOMER COPY

projection

unit: mm/inch

scale: 1.5:1

www.fciconnect.com

title: CARDBUS EJECT HEADER FORCE-SAVING, TYPE 1/2/3

product family : PCMCIA

code: TWN

size: A3

dwg no.: 52366

sheet 1 OF 3

sheet	revision	F	F	F
index	sheet	1	2	3

PDM: Rev:F STATUS: Released Printed: Oct 12, 2010

Tous droits strictement reserves. Reproduction ou communication a des tiers int sous quelque forme que ce soit, sans autorisation ecrite du proprietaire. Droits de reproduction BERG ELECTRONICS bv
All rights strictly reserved. Reproduction or issue to third parties in any for whatever is not permitted without written authority from the proprietor. Copyright BERG ELECTRONICS bv

Downloaded from Elcodis.com electronic components distributor

PRODUCT NO.

52366-300DAS/300DASLF

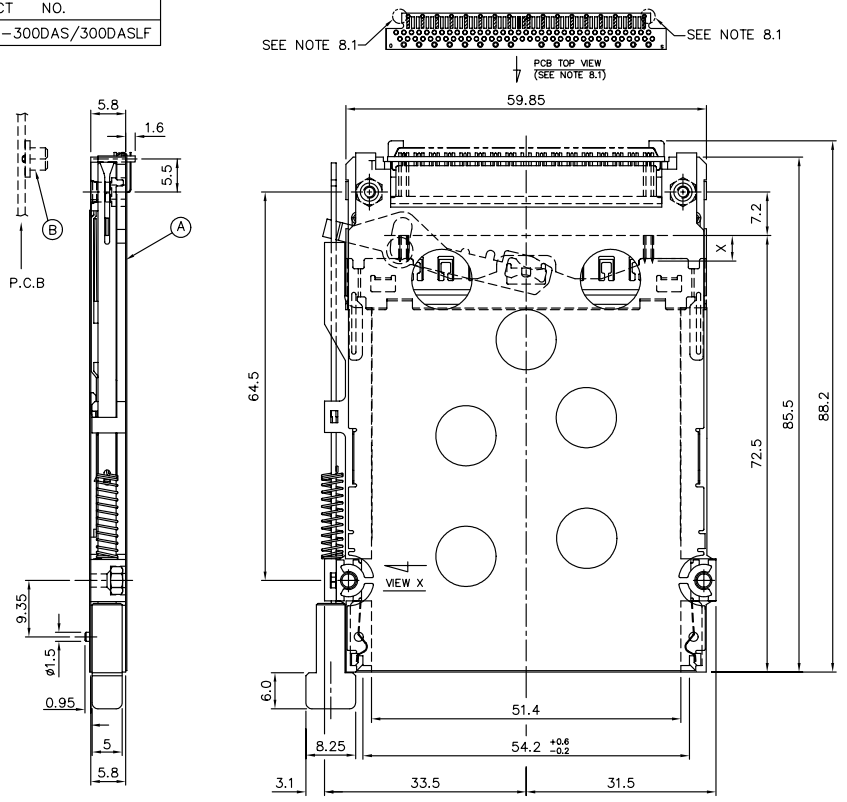

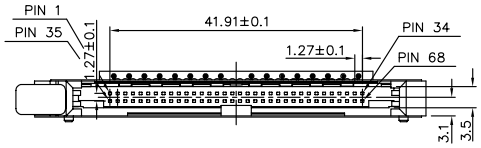

VIEW X
(SEE NOTE 8.2)

NOTES:
1 8.0mm MIN CARD EJECT.
2 EJECT TRAVEL: 9.50mm
3 MATERIAL:
EJECT HEADER ASS'Y
PLASTIC HOUSING: LCP UL94V-0 BLACK
PIN: COPPER ALLOY
PCB: FR4
PLASTIC GUIDE: POLYPHTHARAMID UL94V-0 COLOR : BLACK.
PLATE: STAINLESS
EMI CONTACT: PHOSPHOR BRONZE
4 FINISH
PIN :
UNDER PLATING: 0.5um MIN. Ni
CONTACT AREA: 0.1um MIN. GOLD OVER
0.5um MIN. Pd-Ni
SOLDER TAIL(TIN LEAD OPTION): 2.5um MIN. Sn-Pb
SOLDER TAIL(LEAD FREE OPTION): 2.5um MIN. PURE TIN
GROUND SHIELD :
UNDER PLATING: 0.75um MIN. Ni
CONTACT SURFACE: 0.2 um GOLD.
5 PUSH ROD LOCATION AND P.C.B. ARE AS APPEARS INSTALLED
6 DIM "X"

4.25±0.1	3.5±0.1	5.0±0.1
OTHERS	36,67	1,17,34,35,51,68

7 DO NOT TOUCH AND KEEP CLEAN THE SURFACES OF PCB OF HEADER ASS'Y.
8 SPECIAL FEATURES:
8.1 NO CHAMFER OF VTB
8.2 NO "S"-SLOT
9 IF LEAD FREE P.N.THE HOUSING WILL WITHSTAND EXPOSURE TO 260°C PEAK TEMPERATURE FOR 10 SECONDS IN A WAVE SOLDER APPLICATION WITH A 1.00MM MINIMUM THICK CIRCUIT BOARD.
10 IF LEAD FREE P/N.THE PRODUCT MEETS EUROPEAN UNION DIRECTIVES AND OTHER COUNTRY REGULATIONS AS DISCRIBLED IN GS-22-008
11 LEAD FREE P/N PACKAGING MEETS GS-14-920 SPECIFICATION

ORDERING INFORMATION

NAME	PART NO.	Q'TY
(A) EJECT HEADER ASS'Y	52366-300DAS/300DASLF	1
(B) MATING RECEPTACLE	73277-101002/101002LF	1

mat'l code				tolerance unless otherwise specified		CUSTOMER COPY	FCI www.fciconnect.com
rev.	ecn no.	dr	date	linear	± 0.30	projection	title: CARDBUS EJECT HEADER FORCE-SAVING, TYPE 1/2/3
F				angles	± 2°		
				dr WENDY CHEN 06/25/99		unit mm/inch	product family : PCMCIA / code TWN
				engr STELAR CHU 06/25/99		size A3	dwg no. 52366
				chr JOSEPH HSIA 06/25/99		scale 1.5:1	sheet 2 OF
				appd JENN TSAO 06/25/99			
sheet index	revision sheet						

PDM: Rev:F STATUS: Released Printed: Oct 12, 2010

Tous droits strictement reserves. Reproduction ou communication a des tiers int sous quelque forme que ce soit sans autorisation ecrite du proprietaire. Droits de reproduction BERG ELECTRONICS bv
All rights strictly reserved. Reproduction or issue to third parties in any for whatever is not permitted without written authority from the proprietor. Property of BERG ELECTRONICS. Copyright BERG ELECTRONICS bv

Downloaded from Elcodis.com electronic components distributor

PRODUCT NO.
52366-100DAS/100DASLF
52366-300DAS/300DASLF

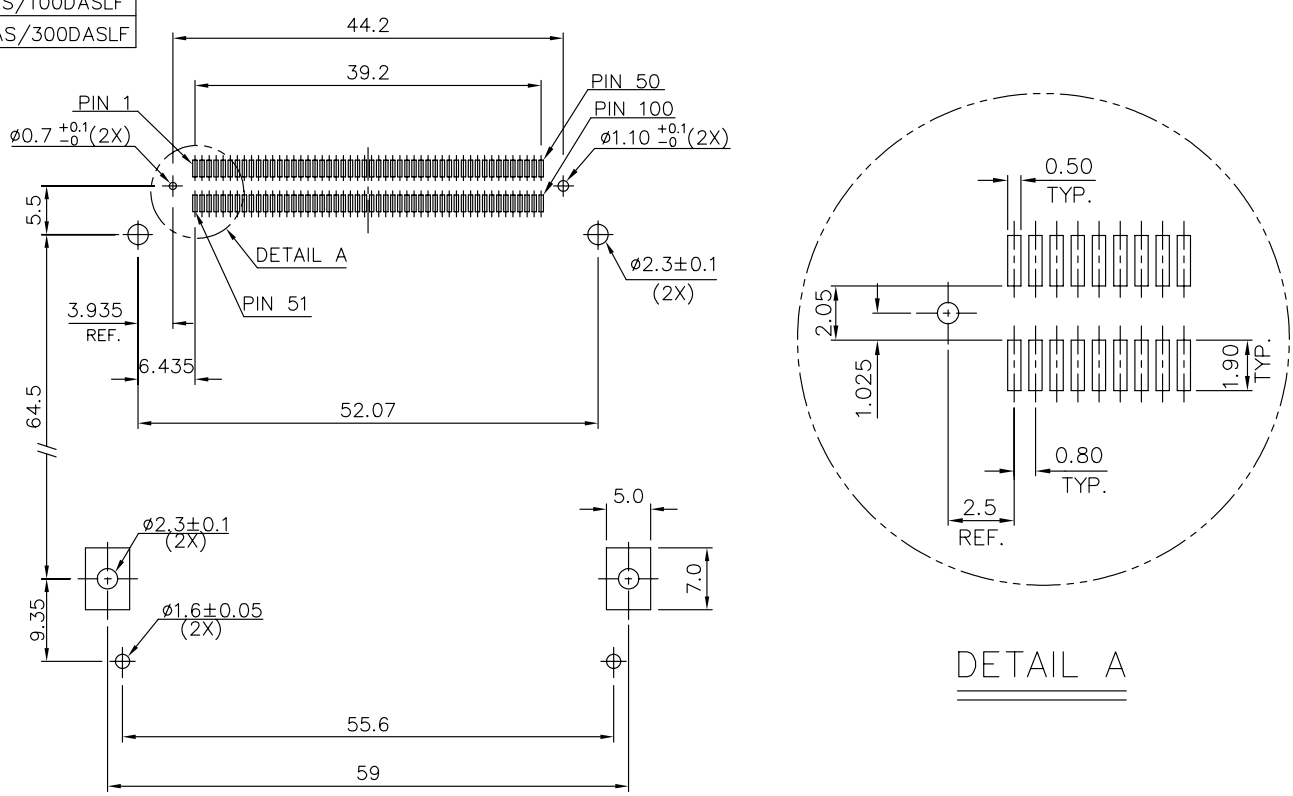

DETAIL A

4 CARD INSERTION DIRECTION

mat'l code				tolerance unless otherwise specified		CUSTOMER COPY	FCI www.fciconnect.com
rev.	ecn no.	dr	date	linear	± 0.10	projection	title CARDBUS EJECT HEADER SMT, TYPE 1/2/3
F				angles	± 2°		
				dr	WENDY CHEN 06/25/99	unit mm/inch	product family : PCMCIA / code TWN
				engr	STELAR CHU 06/25/99		size A3 / dwg no. 52366 / sheet 3 OF
				chr	JOSEPH HSIA 06/25/99	scale 2:1	
				appd	JENN TSAO 06/25/99		
sheet index	revision sheet						

Tous droits strictement reserves. Reproduction ou communication a des tiers int sous quelque forme que ce soit sans autorisation ecrite du propietaire. propriete de c BERG ELECTRONICS. Droits de reproduction BERG ELECTRONICS bv

All rights strictly reserved. Reproduction or issue to third parties in any for whatever is not permitted without written authority from the proprietor. Property of c BERG ELECTRONICS. Copyright BERG ELECTRONICS bv

PDM: Rev:F STATUS: Released Printed: Oct 12, 2010

Downloaded from Elcodis.com electronic components distributor