Product Brief

CFAX34 and CFAX17

FAX Modem Devices

FEATURES

- Two-chip modem solution:
  - CFAXxx modem in 48-pin TQFP or 100 FSBGA with external memory interface.
  - CSP1040 DAA in 20-pin ETSSOP.
- FAX mode capabilities:
  - ITU-T T.31 (FAX class 1) interface.
  - ITU-T T.32 (FAX class 2.1) interface.
  - V.34: 33600—2400 bits/s (CFAX34 only).
  - V.17: 14400—2400 bits/s.
  - V.29, V.27, V.21.
  - ECM with on-chip 64 Kbytes buffer.
- CFAX modem controller includes:
  - ARM7 microcontroller with on-chip RAM and ROM.
  - DP3S with on-chip RAM and ROM.
  - DAA interface and filters.
  - Host interface configurable for 8-bit parallel, serial, or SPI mode.
  - On-chip PWM speaker driver.
  - SIO interface for audio codec used in voice and handset applications.
  - Internal PLL with external low-cost crystal.
- CSP1040 DAA features:
  - Derives power from system for reliable operation on all phone lines.
  - Programmable event detect for caller-ID reception and power ring detection.
  - Programmable pulse shaping and spark quench.
  - Programmable dc-impedance termination for country-specific VI templates.
  - Programmable ac-impedance termination for return-loss matching.
  - Programmable ringer-impedance emulation.
- Hardware support for pulse dialing for accurate make/break timing.
- Hardware support for ringing level and frequency qualification for accurate ring detection.
- Line-in-use and remote handset detection.
- Single 3.3 V supply required for chip set.
- Worldwide caller ID support.

The CFAX family of devices is designed to serve embedded applications where a complete FAX subsystem including protocol processing is desired. The CFAX family includes two devices:

- CFAXV34. Supports V.34, V.17, V.29, and lower FAX rates.
- CFAXV17. Supports V.17, V.29, and lower FAX rates.

The CFAX devices support RS232 and 8-bit micro-processor interfaces. Additionally, the CFAX devices can be configured for operation on a 4-wire SPI bus.

Figure 1 shows a reference design using the 48-pin CFAX and the CSP1040. This is a 2-layer PCB with components on top-side only. The layout can be integrated into a larger PCB or built as a separate module with connectors.

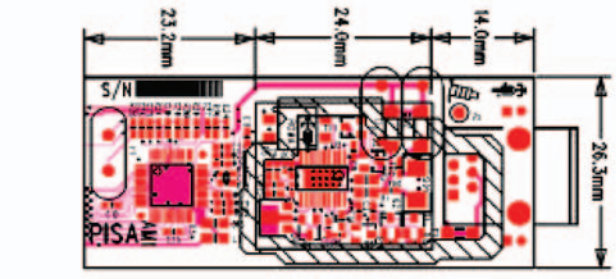

Figure 1. "Pisa" Embedded Modem Module (shown approximately actual size when printed on 8.5" x 11" paper.)

* Actual speeds over U.S. telephone lines vary and are less than 56K due to current FCC regulations and line conditions.

Downloaded from Elcodis.com electronic components distributor

CFAX/CSP1040 System Overview

The LSI CFAXxx chip set is a two-chip solution consisting of an LSI CFAXxx modem controller and a CSP1040 DAA.

The CFAXxx devices support FAX modes with rates up to 33.6 kbits/s and include support for ECM using an on-chip 64 Kbyte buffer. The CFAX device is available in a 48-pin TQFP suitable for most applications. In this package, the internal ARM7 is running from the on-chip ROM. For code development and for applications where customized code is required, the CFAX device is also offered in a 100 FSBGA package.

Figure 2 shows a typical application using a CFAX34 modem controller along with a CSP1040 silicon DAA to add FAX capability to a system.

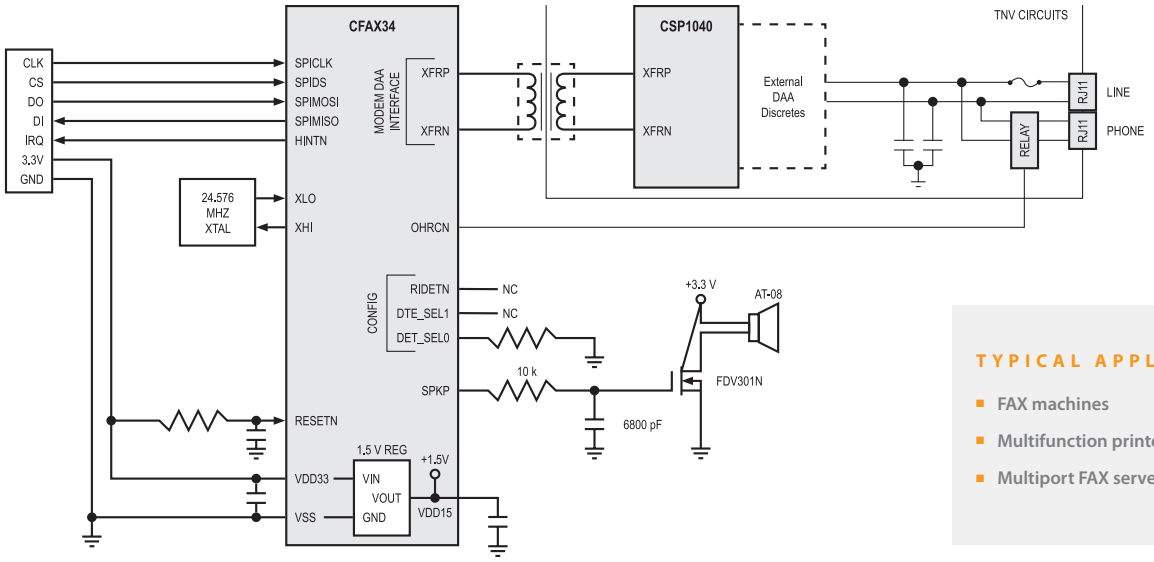

TYPICAL APPLICATIONS

- FAX machines
- Multifunction printers (MFPs)
- Multiport FAX servers

Figure 2. CFAXV34 and CSP1040 in a Typical Application

All CFAX devices support a PWM output for low-cost audio and an optional T38 audio codec for applications requiring a digitally connected handset or microphone and speaker for telephone answering machine or speakerphone applications. The T38 codec provides both single-ended and differential inputs and outputs tailored for use with mic/speaker and handsets.

Ordering Information

Table 1. SV92A Odering Information

DEVICE	PART NUMBER	DESCRIPTION	PACKAGE	COMCODE
CFAX17	L-CFAX17-T48A-DB	V.17 FAX	48 TQFP	7110109440
	L-CFAX17-T48A-DT	V.17 FAX	48 TQFP	7110109450
CFAX34	L-CFAX34-T48A-DB	V.34 FAX	48 TQFP	7110109620
	L-CFAX34-T48A-DT	V.34 FAX	48 TQFP	7110109630
	L-CFAX34-F100A-DB	V.34 FAX	100 FSBGA	7110109460
	L-CFAX34-F100A-DT	V.34 FAX	100 FSBGA	7110109470
CSP1040	L-CSP1040A3-E11-D	DAA version 3	20-pin ETSSOP	7110072260
	L-CSP1040A3-E11-DT	DAA version 3	20-pin ETSSOP	7110072670

Notes: 1) Part numbers beginning with "L" are lead-free, RoHS compliant devices.
2) Part numbers ending in "T" are tape and reel packaging. Others are shipped in trays.

For more information and sales office locations, please visit the LSI web sites at: lsi.com lsi.com/contacts

LSI Corporation, the LSI logo design, and SANtricity are trademarks or registered trademarks of LSI Corporation. All other brand and product names may be trademarks of their respective companies.

LSI Corporation reserves the right to make changes to any products and services herein at any time without notice. LSI does not assume any responsibility or liability arising out of the application or use of any product or service described herein, except as expressly agreed to in writing by LSI; nor does the purchase, lease, or use of a product or service from LSI convey a license under any patent rights, copyrights, trademark rights, or any other of the intellectual property rights of LSI or of third parties.

Copyright ©2007 by LSI Corporation. All rights reserved.
May 2007 PB07-026DMOD

Downloaded from Elcodis.com electronic components distributor