CASE FINISH	CURRENT (AMPS)	WORKING VOLTAGE				MAXIMUM DC RESISTANCE (OHMS)	MAXIMUM VOLTAGE DROP		MINIMUM CAPACITANCE (uF)	MIN. INSERTION LOSS PER MIL-STD-220, FULL LOAD, +25°C													
		-55°C TO +85°C		-55°C TO +125°C																			
		AC	DC	AC	DC		DC	AC		14 KHz	30 KHz	50 KHz	75 KHz	100 KHz	150 KHz	300 KHz	500 KHz	1 MHz	10 MHz	100 MHz	1 GHz	10 GHz
SOLDER	20 ◆	— — — —	150	— — — —	100	0.005	0.05	----	5.2	12	--	--	--	29	31	35	--	35	70	70	70	--

PART MARKING:

SCI-6130-009
DATE CODE

PACKAGE MARKING:

STANDARD

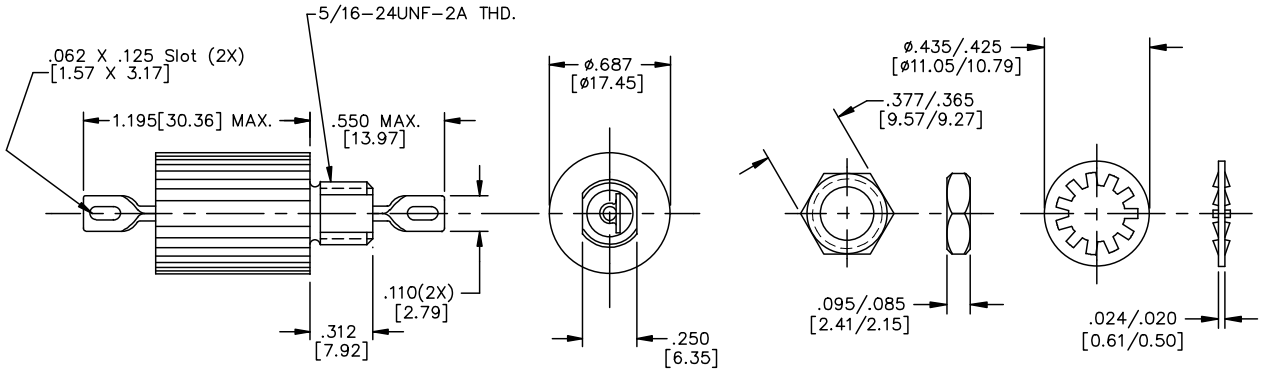

SCHEMATIC

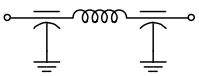

MTG. HARDWARE

MARKING NOTES:

N/A

NOTES:

1) MOUNTING TORQUE NOT TO EXCEED 7 lbs-in.

REV. NO.	CHANGE NOTICE
06	CN. 208194
05	CN. 180637

UNLESS OTHERWISE SPECIFIED DIMENSIONS ARE IN INCHES. [MILLIMETERS] DO NOT SCALE.

TOLERANCES UNLESS OTHERWISE SPECIFIED
Fractions ±
Dec. .xx±
Dec. .xxx± .010
Angles ±0° 30'

CODE IDENT. NO. OLSP2

SPECTRUM CONTROL INC.

ERIE, FAIRVIEW PENNSYLVANIA

Dwn. KAUFFMAN
Ckd. 7/25/02
Sheet 1 of 1

Description Low Pass EMI Filter

SCI-6130-009

Quality Products From The Specialists In Electro-Magnetic Compatibility

Downloaded from Elcodis.com electronic components distributor