PRODUCT No.
90937-001
90937-001LF

REVISIONS				
REV	DESCRIPTION	ECN	BY	DATE
3	REVISED		HA	6/11/'92
4	REVISED		KS	11/18/'92
A	RELEASED	J30167	KS	6/1/'93
B	REVISED(Add "LF")	N06-0031	MZ	03/08'06

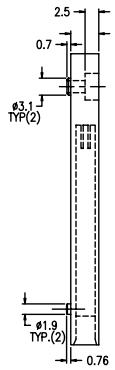

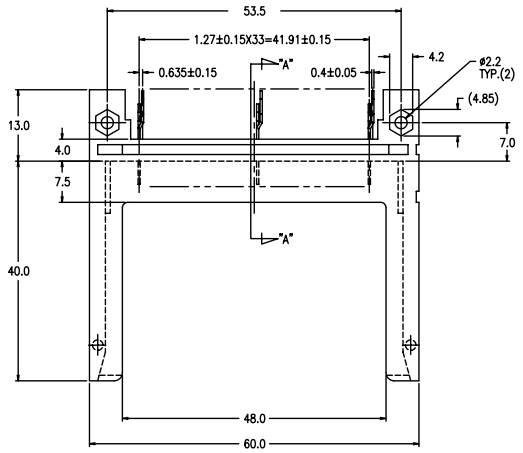

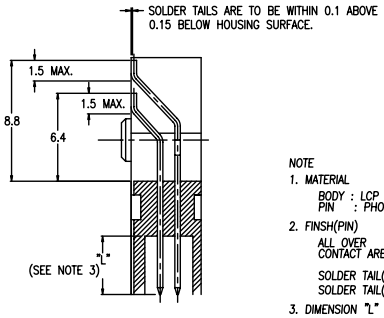

SECTION "A-A" (5/1)

NOTE

1. MATERIAL
   BODY : LCP UL94V-0 BLACK
   PIN : PHOSPHOR BRONZE
2. FINSH(PIN)
   ALL OVER : Ni UNDER PLATING 0.5um THK MIN.
   CONTACT AREA : Au 0.1um THK MIN. OVER Pd/Ni 0.5um THK MIN.
   SOLDER TAIL(Tin Lead option) : Sn/Pb 2.5um THK MIN.
   SOLDER TAIL(Lead free option) :Pure Tin 2.5um THK MIN.
3. DIMENSION "L"

1,17,34,35,51,68PIN	5.0±0.1
36,67PIN	3.5±0.1
OTHERS	4.25±0.1

4. CARD SLOT AND PIN DIMENSIONS PER JEIDA/PCMCIA STANDARDS
5. IF LEAD FREE P.N.THE HOUSING WILL WITHSTAND EXPOSURE TO 260°C PEAK TEMPERATURE FOR 10 SECONDS IN A WAVE SOLDER APPLICATION WITH A 1.00MM MINIMUM THICK CIRCUIT BOARD.
6. IF LEAD FREE P/N.THE PRODUCT MEETS EUROPEAN UNION DIRECTIVES AND OTHER COUNTRY REGULATIONS AS DISCRIBLED IN GS-22-008
7. LEAD FREE P/N PACKAGING MEETS GS-14-920 SPECIFICATION

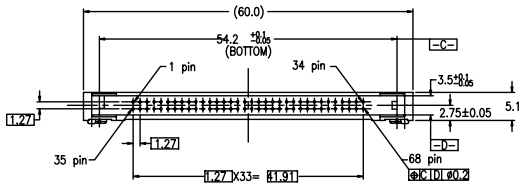

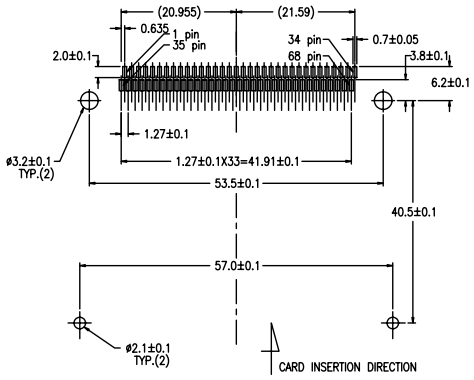

RECOMMENDED FOOT PRINT (MOUNTED SIDE)

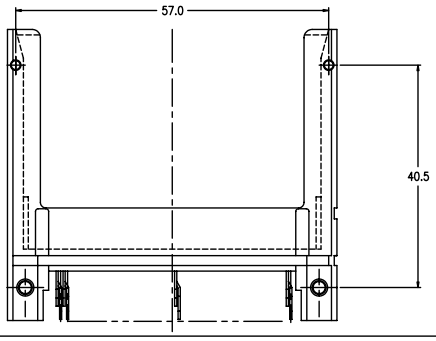

SHEET INDEX	ISSUE	B	B	B	B
	SH NO.	1	2	3	4

TOLERANCES UNLESS OTHERWISE SPECIFIED	MAT SEE NOTE 1	DR S.Ohmori	DATE 6/1/'93	CUSTOMER COPY
LINEAR ±0.3	FINISH SEE NOTE 2	ENGR		THIRD ANGLE PROJ.
ANGLES		CHK		UNIT MM
		APPD		

BERG ELECTRONICS

TITLE 68POS. HEADER ASS'Y JEIDA / PCMCIA TYPE I, II

SCALE	SIZE	DWG. NO.	REV	SHEET
2/1	C	90937	B	1 of 4

PDM: Rev:B STATUS **Released** Printed: Oct 12, 2010

Downloaded from Elcodis.com electronic components distributor

PRODUCT No.
90937-002
90937-002LF

REVISIONS				
REV	DESCRIPTION	ECN	BY	DATE
5	REVISED		HA	6/11/'92
6	REVISED		KS	11/18/'92
A	RELEASED	J30167	KS	6/1/'93
B	REVISED(Add "LF")	N06-0031	MZ	03/08'06

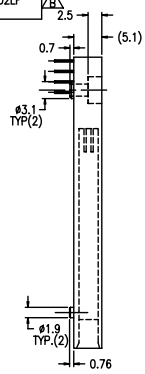

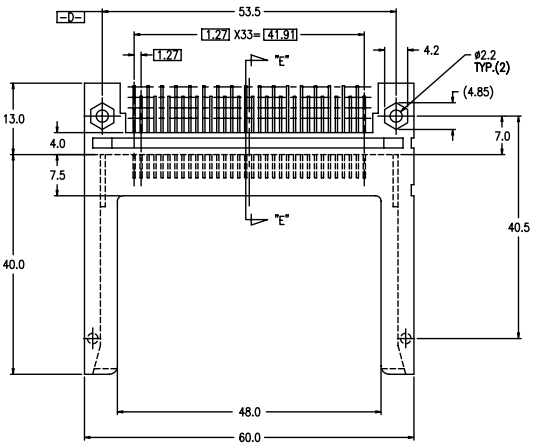

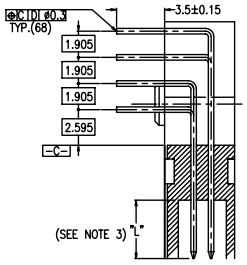

SECTION "E-E" (5/1)

NOTE

1. MATERIAL
   BODY : LCP UL94V-0 BLACK
   PIN : PHOSPHOR BRONZE
2. FINSH(PIN)
   ALL OVER : Ni UNDER PLATING 0.5um THK MIN.
   CONTACT AREA : Au 0.1um THK MIN.
   OVER Pd/Ni 0.5um THK MIN.
   SOLDER TAIL(Tin Lead option) : Sn/Pb 2.5um THK MIN.
   SOLDER TAIL(Lead free option) :Pure Tin 2.5um THK MIN.
3. DIMENSION "L"

1,17,34,35,51,68PIN	5.0±0.1
36,67PIN	3.5±0.1
OTHERS	4.25±0.1

4. CARD SLOT AND PIN DIMENSIONS PER JEIDA/PCMCIA STANDARDS
5. IF LEAD FREE P.N.THE HOUSING WILL WITHSTAND EXPOSURE TO 260°C PEAK TEMPERATURE FOR 10 SECONDS IN A WAVE SOLDER APPLICATION WITH A 1.00MM MINIMUM THICK CIRCUIT BOARD.
6. IF LEAD FREE P/N.THE PRODUCT MEETS EUROPEAN UNION DIRECTIVES AND OTHER COUNTRY REGULATIONS AS DISCRIBLED IN GS-22-008
7. LEAD FREE P/N PACKAGING MEETS GS-14-920 SPECIFICATION

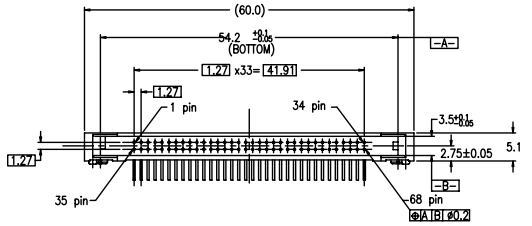

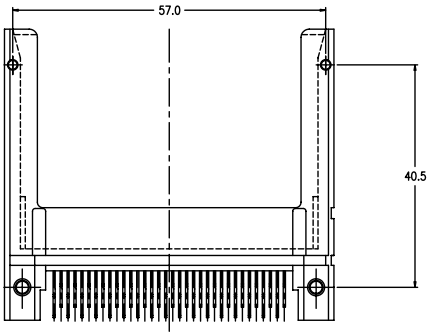

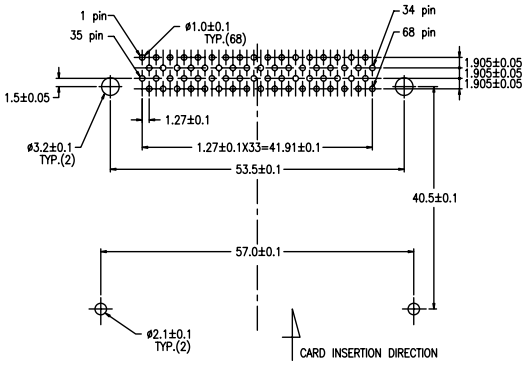

RECOMMENDED FOOT PRINT (MOUNTED SIDE)

SHEET INDEX	ISSUE / SH NO.					
TOLERANCES UNLESS OTHERWISE SPECIFIED		MAT	DR S.Ohmori	DATE 6/1/'93	CUSTOMER COPY	TITLE 68POS. HEADER ASS'Y JEIDA / PCMCIA TYPE I, II
LINEAR	±0.3	SEE NOTE 1	ENGR		THIRD ANGLE PROJ.	
		FINISH	CHK			
ANGLES		SEE NOTE 2	APPD		UNIT MM	SCALE 2/1 · SIZE C · DWG. NO. 90937 · REV B · SHEET 2 OF

BERG ELECTRONICS

PDM: Rev:B STATUS **Released** Printed: Oct 12, 2010

Downloaded from Elcodis.com electronic components distributor

PRODUCT No.
90937-013
90937-013LF B

REVISIONS				
REV	DESCRIPTION	ECN	BY	DATE
1	SKETCHED		MM	4/6/'92
2	REVISED		KS	10/14/'92
A	RELEASED	J30167	KS	6/1/'93
B	REVISED(Add "LF")	N06-0031	MZ	03/08'06

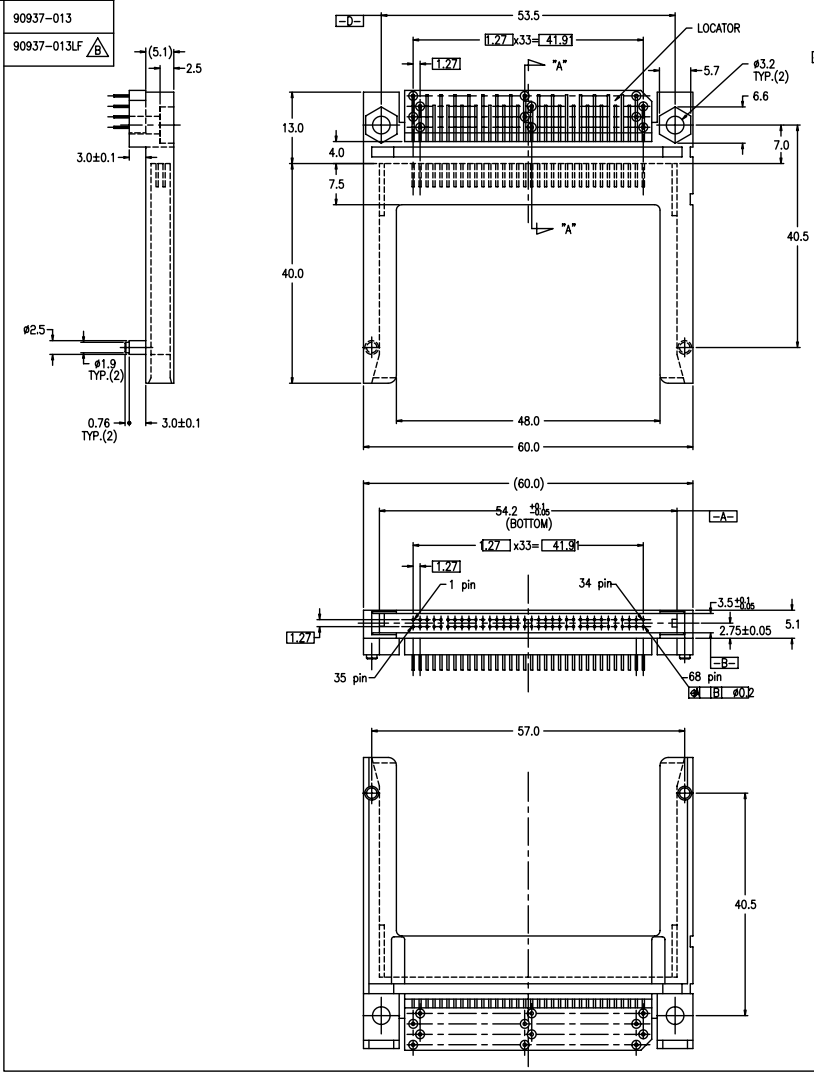

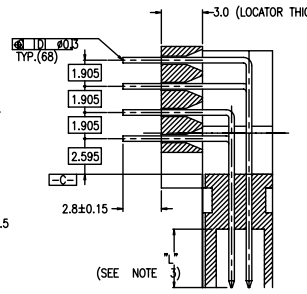

SECTION "A-A" (5/1)

NOTE

1. MATERIAL
   BODY : LCP UL94V-0 BLACK
   PIN : PHOSPHOR BRONZE
2. FINSH(PIN)
   ALL OVER CONTACT AREA : Ni UNDER PLATING 0.5um THK MIN.
   Au 0.1um THK MIN.
   OVER Pd/Ni 0.5um THK MIN.
   SOLDER TAIL(Tin Lead option) : Sn/Pb 2.5um THK MIN.
   SOLDER TAIL(Lead free option) :Pure Tin 2.5um THK MIN.
3. DIMENSION "L"

1,17,34,35,51,68PIN	5.0±0.1
36,67PIN	3.5±0.1
OTHERS	4.25±0.1

4. CARD SLOT AND PIN DIMENSIONS PER JEIDA/PCMCIA STANDARDS
5. IF LEAD FREE P.N.THE HOUSING WILL WITHSTAND EXPOSURE TO 260°C PEAK TEMPERATURE FOR 10 SECONDS IN A WAVE SOLDER APPLICATION WITH A 1.00MM MINIMUM THICK CIRCUIT BOARD.
6. IF LEAD FREE P/N.THE PRODUCT MEETS EUROPEAN UNION DIRECTIVES AND OTHER COUNTRY REGULATIONS AS DISCRIBLED IN GS-22-008
7. LEAD FREE P/N PACKAGING MEETS GS-14-920 SPECIFICATION

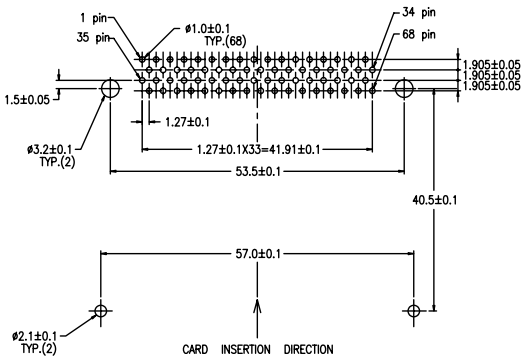

RECOMMENDED FOOT PRINT(MOUNTED SIDE)

SHEET INDEX	ISSUE / SH NO.				BERG ELECTRONICS
TOLERANCES UNLESS OTHERWISE SPECIFIED	MAT SEE NOTE 1	DR S.Ohmori	DATE 6/1/'93	CUSTOMER COPY	TITLE 68POS. HEADER ASS'Y JEIDA / PCMCIA TYPE II
LINEAR ±0.3	FINISH SEE NOTE 2	ENGR		THIRD ANGLE PROJ.	
ANGLES		CHK		UNIT MM INCHES	SCALE 2/1 · SIZE C · DWG. NO. 90937 · REV B · SHEET 3 OF
		APPD			

PDM: Rev:B STATUS:Released Printed: Oct 12, 2010

Downloaded from Elcodis.com electronic components distributor

PRODUCT No.
90937-003
90937-003LF (B)

REVISIONS				
REV	DESCRIPTION	ECN	BY	DATE
1	SKETCHED		KS	10/30/'92
2	REDRAWN		KS	11/18/'92
A	RELEASED	J30167	KS	6/1/'93
B	REVISED(Add "LF")	N06-0031	MZ	03/08'06

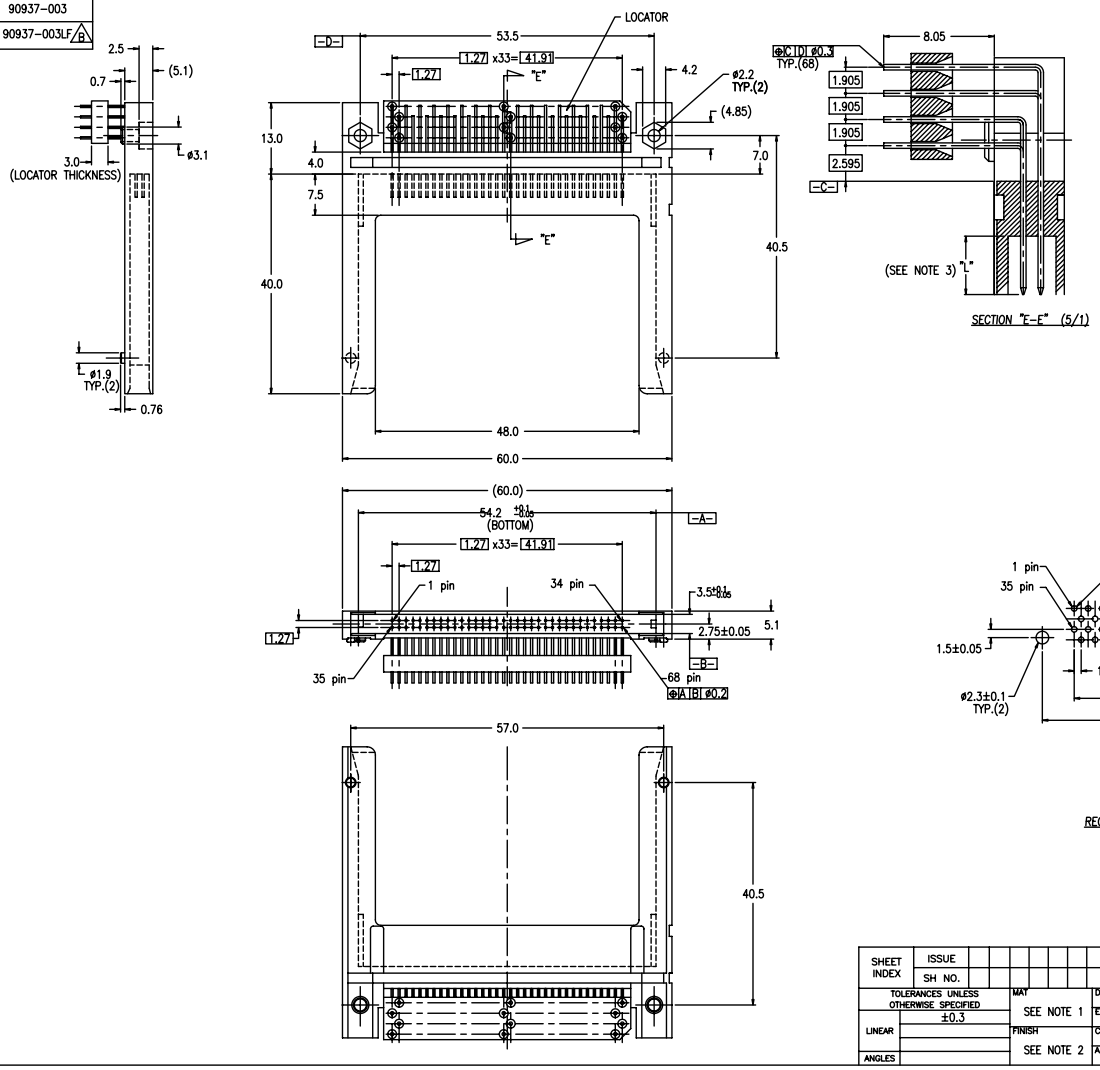

NOTE

1. MATERIAL
   BODY : LCP UL94V-0 BLACK
   PIN : PHOSPHOR BRONZE
2. FINSH(PIN)
   ALL OVER : Ni UNDER PLATING 0.5um THK MIN.
   CONTACT AREA : Au 0.1um THK MIN. OVER Pd/Ni 0.5um THK MIN.
   SOLDER TAIL(Tin Lead option) : Sn/Pb 2.5um THK MIN.
   SOLDER TAIL(Lead free option) :Pure Tin 2.5um THK MIN.
3. DIMENSION "L"

1,17,34,35,51,68PIN	5.0±0.1
36,67PIN	3.5±0.1
OTHERS	4.25±0.1

4. CARD SLOT AND PIN DIMENSIONS PER JEIDA/PCMCIA STANDARDS
5. IF LEAD FREE P.N.THE HOUSING WILL WITHSTAND EXPOSURE TO 260°C PEAK TEMPERATURE FOR 10 SECONDS IN A WAVE SOLDER APPLICATION WITH A 1.00MM MINIMUM THICK CIRCUIT BOARD.
6. IF LEAD FREE P/N.THE PRODUCT MEETS EUROPEAN UNION DIRECTIVES AND OTHER COUNTRY REGULATIONS AS DISCRIBLED IN GS-22-008
7. LEAD FREE P/N PACKAGING MEETS GS-14-920 SPECIFICATION

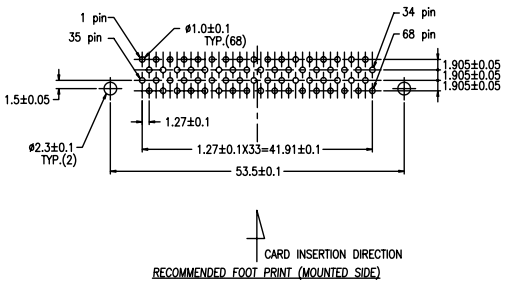

RECOMMENDED FOOT PRINT (MOUNTED SIDE)

SHEET INDEX	ISSUE / SH NO.				
TOLERANCES UNLESS OTHERWISE SPECIFIED		MAT SEE NOTE 1	DR S.Ohmori	DATE 6/1/'93	CUSTOMER COPY
LINEAR	±0.3	FINISH SEE NOTE 2	ENGR		THIRD ANGLE PROJ.
ANGLES			CHK		UNIT MM
			APPD		

BERG ELECTRONICS

TITLE: 68POS. HEADER ASS'Y JEIDA / PCMCIA TYPE I, II

SCALE	SIZE	DWG. NO.	REV	SHEET
2/1	C	90937	B	4 OF

PDM: Rev:B STATUS **Released** Printed: Oct 12, 2010

Downloaded from Elcodis.com electronic components distributor