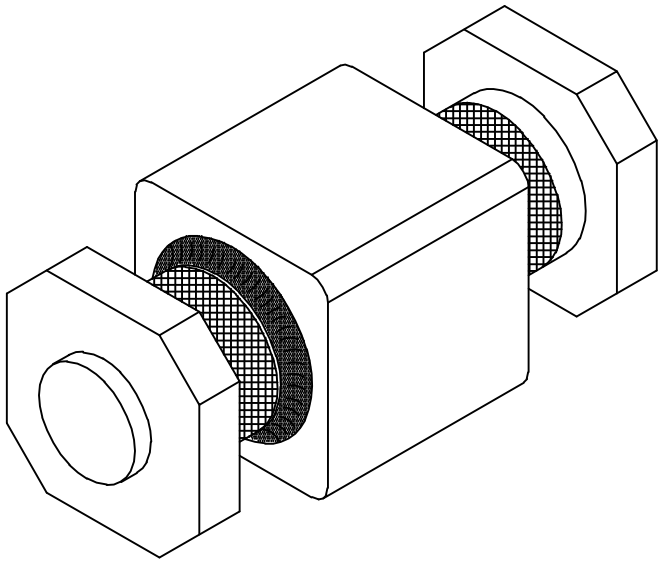

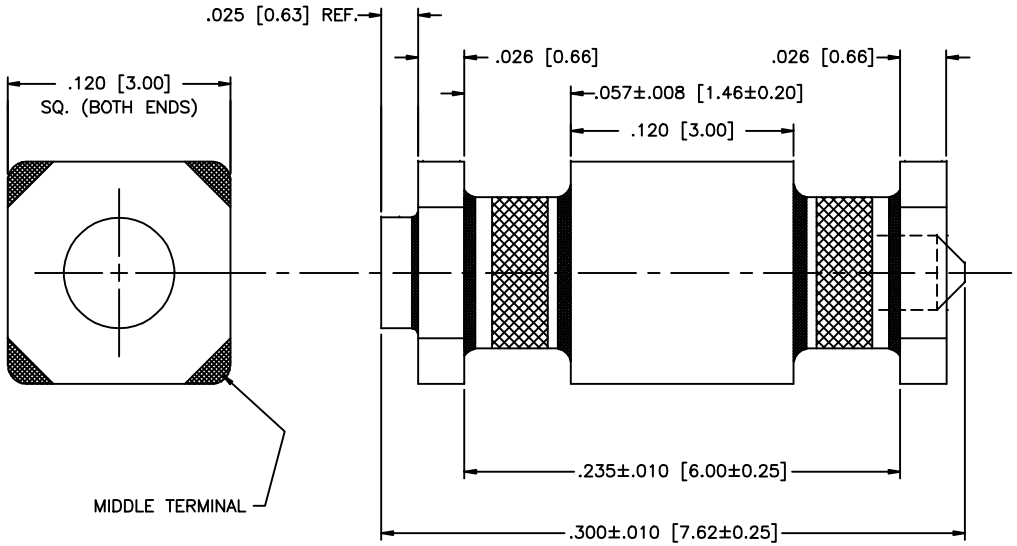

NOTES:

1) CAPACITANCE (1000hrs.): 820pF
2) CAP TOLERANCE: ±20%
3) DISSIPATION FACTOR: 4% MAX.
4) INSULATION RESISTANCE: 25°C 1GOHM
5) 200 VDC RATED @ +125°C
6) DIELECTRIC WITHSTANDING VOLTAGE: 700 VDC
7) CURRENT RATING: 10 AMPS
8) REFLOW TEMPERATURE LIMIT: +235°C FOR 5 SEC.
9) PACKAGING: BAG (1000 PCS. MAX./ BAG)

MARKING:

PART: NONE

PACKAGE: PART NO.
SCI DATE CODE
QTY.

REV. NO. 00	UNLESS OTHERWISE SPECIFIED DIMENSIONS ARE IN INCHES. DO NOT SCALE.	TOLERANCES UNLESS OTHERWISE SPECIFIED Fractions ± 1/64 Dec. .xx ± .01[0.254] Dec. .xxx ± .005[0.127] Angles ±0° 30′	SPECTRUM CONTROL INC. FAIRVIEW PENNSYLVANIA
CN 58267-ENG CHANGE NOTICE		CODE IDENT. NO. OLSP2	Dwn. KAUFFMAN Date 3-16-11 Engr. B.DEVINE Sheet 1 of 2
			Description SURFACE MOUNT FILTER PSM4F-821M-10B

Quality Products From The Specialists In Electro-Magnetic Compatibility

Downloaded from Elcodis.com electronic components distributor