Downloaded from Elcodis.com electronic components distributor

MICRO SWITCH
a Honeywell Division
FED.MFG.CODE 91929

PACKET

CATALOG LISTING
19PA137-HM

THIS DRAWING COVERS A PROPRIETARY ITEM AND IS THE PROPERTY OF MICRO SWITCH, A DIVISION OF HONEYWELL. THIS DRAWING IS NOT TO BE COPIED OR USED WITHOUT THE APPROVAL OF MICRO SWITCH.

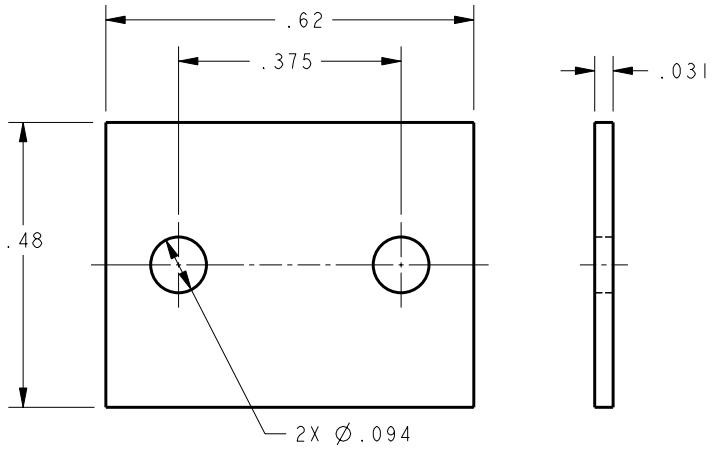

NOTES
1 - PACKET CONTAINS ONE (1) MOUNTING PLATE FOR HM-TYPE SWITCHES
2 - PLATE INCREASES ALLOWABLE MOUNTING TORQUE FOR HM-TYPE SWITCHES FROM 1.5 IN/LB MAX TO 3.0 IN/LB MAX

THIRD ANGLE PROJECTION

SCALE 4 : 1

DO NOT SCALE PRINT

UNLESS OTHERWISE SPECIFIED TOLERANCES ARE

ONE PLACE	(.0)	±.030
TWO PLACE	(.00)	±.015
THREE PLACE	(.000)	±.005
ANGLES		±

WEIGHT 1.4 GRAMS MAX

ANSI Y14.5M-1982 APPLIES

CATALOG LISTING 19PA137-HM
PAGE 1 OF 1
ISSUE 2
RELEASE NO. PR-15860
REPLACES

DRAWN	J A F	24 AUG 99	
CHECK	J A F	24 AUG 99	
CHECK	J A F	24 AUG 99	
CHECK			

REVISIONS
A C095534 J A F 24 AUG 99

PTC/CAD 3D