NOTES:

1. ELECTRICAL SPECIFICATIONS:
   CENTER FREQUENCY: 1592 MHz
   FREQUENCY TOLERANCE: ±10 MHz
   3:1 VSWR B.W. = 175 MHz
   MIN GAIN @ C.F. = 4 dBic
   HALF POWER BEAMWIDTH:
   110° SOLID ANGLE
   EFFICIENCY: 60% TYPICAL
   VSWR @ C.F. = ≤ 1.8:1
   AXIAL RATIO: 6 dB
   RIGHT HAND CIRCULAR POLARIZATION
   Z_{IN} = 50 OHMS
2. SPECIFICATIONS ARE FOR UNPACKAGED ANTENNA.
3. FOOTPRINT AND ELECTRICAL SPECIFICATIONS ARE SUBJECT TO CHANGE. CONSULT SPECTRUM CONTROL FOR SPECIFIC APPLICATIONS.
4. TESTING TO BE PERFORMED ON AN ALUMINUM GROUND PLANE, 63mm (2.480 IN) X 63mm (2.480 IN) SQUARE, IN FREE SPACE.

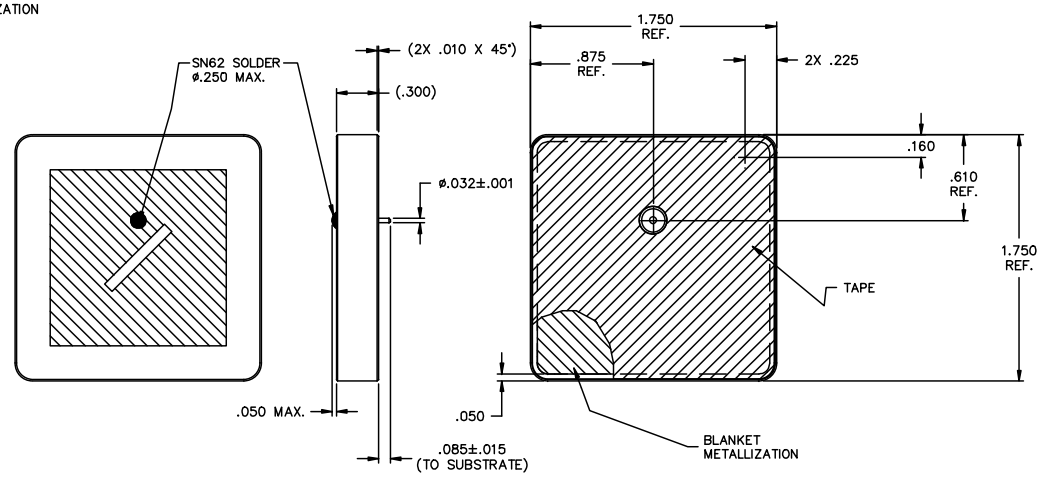

REV. NO.	CHANGE NOTICE	REDRAWN	
05	CN 55918-ENG		
04	CN 55690-ENG		

UNLESS OTHERWISE SPECIFIED DIMENSIONS ARE IN INCHES.
DO NOT SCALE.
THIRD ANGLE

TOLERANCES UNLESS OTHERWISE SPECIFIED
Fractions ± 1/64
Dec. .xx± .01
Dec. .xxx± .005
Angles ±0° 30'
CODE IDENT. NO. OLSP2

SPECTRUM CONTROL INC.
FAIRVIEW PENNSYLVANIA
Dwn. KAUFFMAN
DATE 9-02-10
Engr. J. KRAUS
Sheet 1 of 1
Description PATCH ANTENNA SALES DRAWING
PA45-1592-175SA

Quality Products From The Specialists In Electro-Magnetic Compatibility

Downloaded from Elcodis.com electronic components distributor

NOTES:

1. ELECTRICAL SPECIFICATIONS:
   CENTER FREQUENCY: 1592 MHz
   FREQUENCY TOLERANCE: ±10 MHz
   3:1 VSWR B.W. = 175 MHz
   MIN GAIN @ C.F. = 4 dBic
   HALF POWER BEAMWIDTH:
   110° SOLID ANGLE
   EFFICIENCY: 60% TYPICAL
   VSWR @ C.F. = ≤ 1.8:1
   AXIAL RATIO: 6 dB
   RIGHT HAND CIRCULAR POLARIZATION
   Z_{IN} = 50 OHMS
2. SPECIFICATIONS ARE FOR UNPACKAGED ANTENNA.
3. FOOTPRINT AND ELECTRICAL SPECIFICATIONS ARE SUBJECT TO CHANGE. CONSULT SPECTRUM CONTROL FOR SPECIFIC APPLICATIONS.
4. TESTING TO BE PERFORMED ON AN ALUMINUM GROUND PLANE, 63mm (2.480 IN) X 63mm (2.480 IN) SQUARE, IN FREE SPACE.

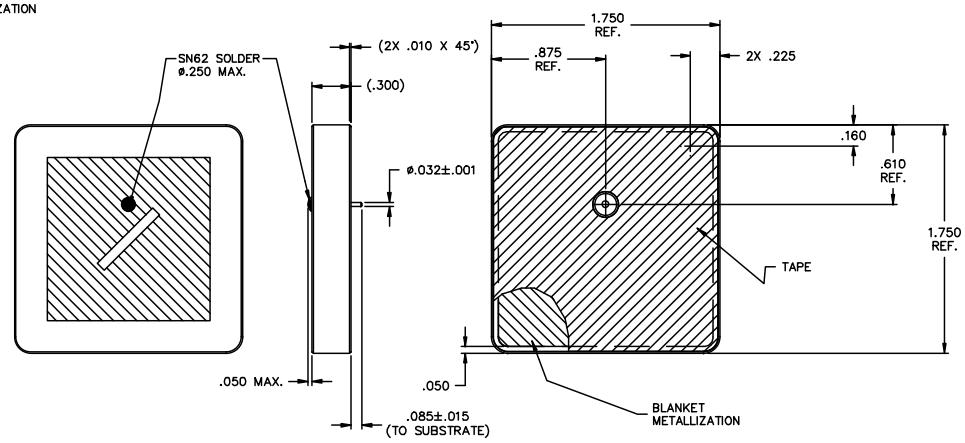

REV. NO.	CHANGE NOTICE
05	CN 55918-ENG
04	CN 55690-ENG REDRAWN

UNLESS OTHERWISE SPECIFIED DIMENSIONS ARE IN INCHES. DO NOT SCALE.

THIRD ANGLE

TOLERANCES UNLESS OTHERWISE SPECIFIED
Fractions ± 1/64
Dec. .xx± .01
Dec. .xxx± .005
Angles ±0° 30'

CODE IDENT. NO. OLSP2

SPECTRUM CONTROL INC.

Dwn. KAUFFMAN
DATE 9-02-10
Engr. J. KRAUS
Sheet 1 of 1

FAIRVIEW PENNSYLVANIA

Description PATCH ANTENNA SALES DRAWING

PA45-1592-175SA

Quality Products From The Specialists In Electro-Magnetic Compatibility

Downloaded from Elcodis.com electronic components distributor