PART NUMBER	LEAD FREE VERSION	MARKING
7432E0225S01	7432E0225S01LF	YES
7332E0225S01	7332E0225S01LF	NO

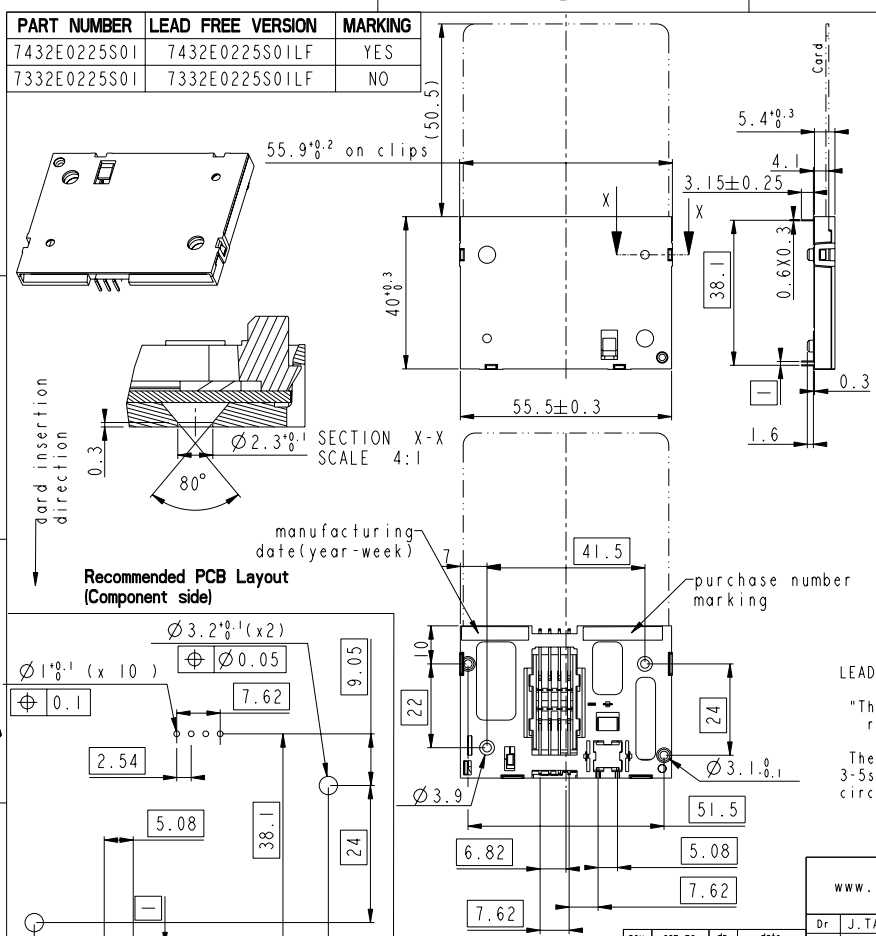

Recommended PCB Layout
(Component side)

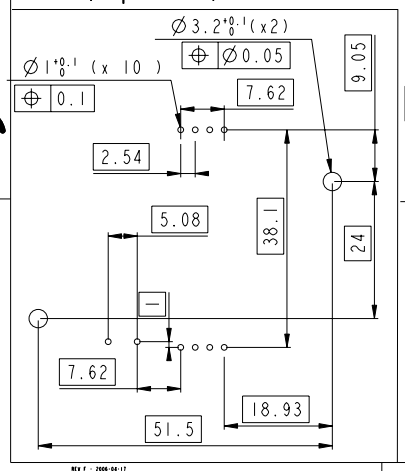

GENERAL :
High cycle life duration smart card connector with landing type contacts mechanism.The landing type connector also provides the feature of recessed contacts when card is not inserted which protects them against vandalism.
Smart card for reference purposes only.

ELECTRICAL PROPERTIES:
Insulation resistance : > 1000MΩ
Dielectric withstanding voltage : >750 Vrms
Curent carrying capacity : Min 10µA, Max 1A
Contact resistance : < 100mΩ

MECHANICAL PROPERTIES :
Operating force : Insertion : F < 10N
Withdrawal : 1 < F< 10N
Contact Normal force : 0.2 < F< 0.3 for 0.6mm of deflection
Durability : 200 000 mating cycles

MATERIAL :
Head reader : Thermoplastic, Colour Grey, Rated UL94V0
Cover : Thermoplastic, Colour Grey, Rated UL94V0
Contacts : Copper alloy,
Plating : Gold over Ni or equivalent on contact area
SnPb over Ni on solder tails(FOR LEADED VERSION)
Matte tin over Ni on solder tails(FOR LEAD FREE VERSION)

ENVIRONMENT :
Operating temperature : -40°C / +85°C
Climatic conditions : UTE 93-421

PACKAGING :
Plastic cavity tray

LEAD FREE VERSION:

"This product meets European Union Directives and other country regulations as described in GS-22-008"

The housing will withstand exposure to 260°C peak temperature for 3-5seconds in a wave solder application with a 1.6mm minimum thick circuit board.

General Tolerances	
0 to 10mm:	±0.1mm
10 to 30mm:	±0.15mm
30 to 60mm:	±0.2mm
60 and more:	±0.3mm

rev	ecn no	dr	date
B	F20341	DLE	2002/06/04
C	LS3077	MPE	2003/09/17
D	LS3088	MPE	2003/10/13
E	105-0176	NT	2005/09/30
F	106-0078	DTK	2006/06/19
G	108-0136	SSC	2008/10/10
H	109-0013	SSC	2009/01/24

www.fciconnect.com

surface -- ISO 1302 | tolerance std ISO 406 ISO 1101 | projection | mm

TOLERANCES UNLESS OTHERWISE SPECIFIED

Dr	J.TARON	2002/04/29	ANGULAR	LINEAR	0.X	±	size A3	Scale 1:1
Eng	LE GALLIC	2002/04/29			0.XX	±		
Chr	S.S.CHERIAN	2009/01/24	0° ±°		0.XXX	±	ECN	109-0013
Appr	S.S.CHERIAN	2009/01/24	Product family		MOBILE I/O		Spec ref	--

title: E02 WITH PEG
SMART CARD READER VXX 27790
dwg no: VJW54004
Rev. H
catalog no: See Table
CUSTOMER
sheet 1 of 1

PDM: Rev:H STATUS Released Printed: Jan 29, 2010

Copyright FCI.

Downloaded from Elcodis.com electronic components distributor