RF TRANSFORMER

Low Profile Wideband RF Transformers

Pulse
A TECHNITROL COMPANY

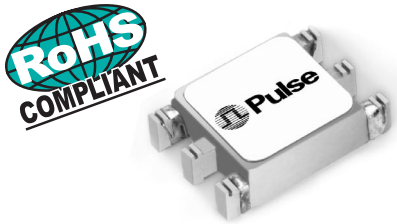

- RoHS peak reflow temperature rating: 245°C
- Miniature surface mount package
- Excellent insertion loss
- Various Frequencies and Ratios

Electrical Specifications @ 25°C — Operating Temperature -40°C to +85°C

RoHS Compliant Part Number	Impedance Ratio (Pri:Sec)	Turns Ratio (Pri:Sec)	Insertion Loss [1] (dB TYP)			Return Loss (dB TYP)						
			3 dB	2 dB	1 dB	0.3 MHz	50 MHz	100 MHz	150 MHz	200 MHz	300 MHz	—
CX2141NL	4CT:1CT	2CT:1CT	.3-300	.4-200	.5-90	-4	-15	-16	-13	-10	-6	—
CX2157NL	1:1CT	1:1CT	.4-800	.5-700	1-600	400 KHz	1 MHz	10 MHz	50 MHz	200 MHz	400 MHz	800 MHz
						-13	-18	-28	-26	-16	-10	-7
CX2158NL	1:4CT	1:2CT	2-775	3-600	6-250	2 KHz	6 MHz	58 MHz	106 MHz	250 MHz	775 MHz	—
						-16	-22	-21	-20	-16	-6	—

NOTE : 1. Referenced to Mid-band Frequency - Input Impedance: 75W. **2.** For optional Tape & Reel packaging, add a "**T**" suffix to the part number (ex: CX2141NLT).

Electrical Specifications @ 25°C — Operating Temperature 0°C to 70°C

RoHS Compliant Part Number	Impedance Ratio (Pri:Sec)	Return Loss (dB MAX)	Insertion Loss [1] (dB TYP)					Hi-pot (Vrms)	CMRR (dB MIN)				DCR (Ω MAX)	
		5-65MHz	100kHz	300kHz	400kHz-70MHz	100MHz	130MHz		300kHz-1MHz	10MHz	60MHz	80MHz-300MHz	Pins 1-3	Pins 1-3
C2160NL	2.65:1	-16	-3	-2	-1	-2	-3	500	-50	-40	-30	-20	.35	.65

Mechanical

CX2141NL/CX2157NL/CX2158NL/C2160NL

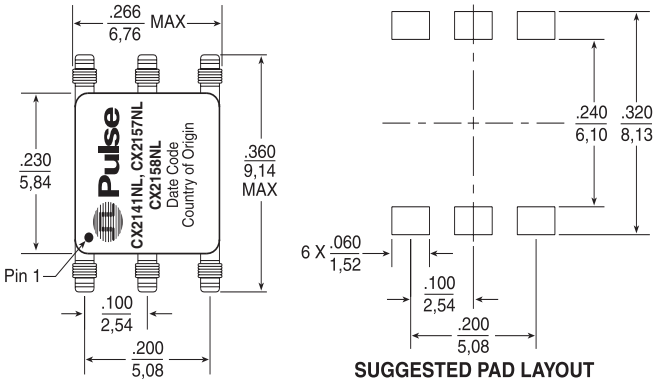

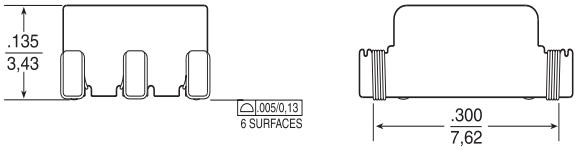

Schematics

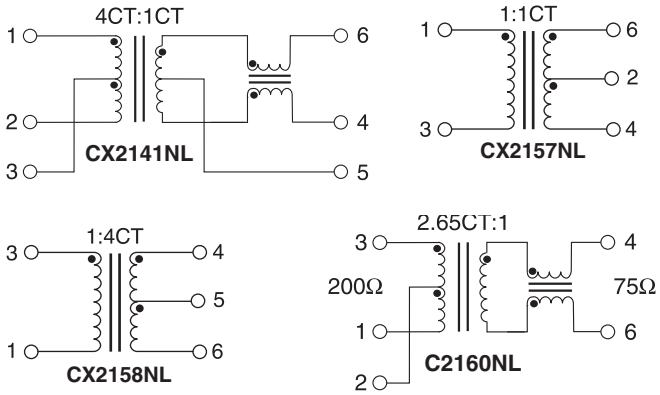

Weight . . . . . 0.17 grams
Tape & Reel . . . . . 1500 /reel
Tube . . . . . 60 /tube
Dimensions: Inches / mm

Unless otherwise specified, all tolerances are ± .005 / 0,13

For More Information:

Pulse Worldwide Headquarters
12220 World Trade Drive
San Diego, CA 92128
U.S.A.
www.pulseeng.com
TEL: 858 674 8100
FAX: 858 674 8262

Pulse Northern Europe
3 Huxley Road
Surrey Research Park
Guildford, Surrey GU2 5RE
United Kingdom
TEL: 44 1483 401700
FAX: 44 1483 401701

Pulse Southern Europe
Zone Industrielle
F-39270
Orgelet
France
TEL: 33 3 84 35 04 04
FAX: 33 3 84 25 46 41

Pulse China Headquarters
No. 1
Industrial District
Changan, Dongguan
China
TEL: 86 769 5538070
FAX: 86 769 5538870

Pulse North China
Room 1002
No. 819
Nanjing West Rd
Shanghai
China
TEL: 86 21 32181071
FAX: 86 21 32181396

Pulse South Asia
135 Joo Seng Rd.
#03-02
PM Industrial Bldg.
Singapore 368363
TEL: 65 6287 8998
FAX: 65 6280 0080

Pulse North Asia
3F-4, No. 81, Sec. 1
Hsin Tai Wu Road
Hsi-Chih
Taipei Hsien
Taiwan
TEL: 886 2 26980228
FAX: 886 2 26980948

Performance warranty of products offered on this data sheet is limited to the parameters specified. Data is subject to change without notice. Other brand and product names mentioned herein may be trademarks or registered trademarks of their respective owners.
© Copyright, 2005. Pulse Engineering, Inc. All rights reserved.

Downloaded from Elcodis.com electronic components distributor