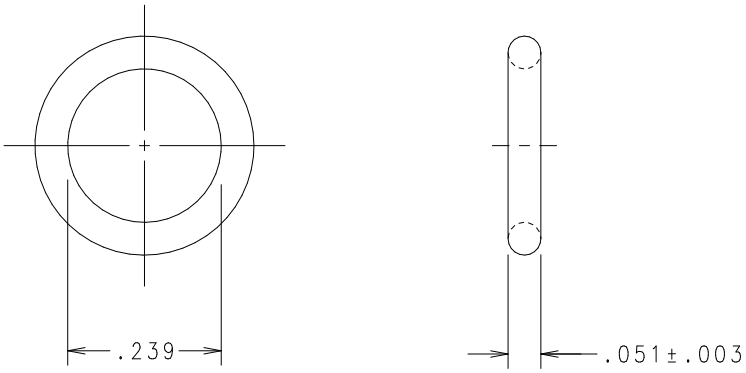

NO	COMPONENT NO	DESCRIPTION	QTY/M	U/M

BILL OF MATERIAL

UNLESS OTHERWISE SPECIFIED, DIMENSIONS DO NOT INCLUDE PLATING.

O	DENOTES CRITICAL CHARACTERISTICS.
CPK	DENOTES CPK DIMENSIONS,-MINIMUM CPK VALUE
⟨ST⟩	DENOTES A CHARACTERISTIC THAT PROVIDES AN INDICATION OF PROCESS PERFORMANCE. PROCEDURE FOR MEASUREMENT AND TRACKING TO BE DEFINED IN LITTELFUSE INSPECTION INSTRUCTIONS.
CP	DENOTES CP DIMENSIONS,-MINIMUM CP VALUE MUST BE WITHIN THE DIMENSIONAL LIMITATIONS SHOWN ON DRAWING AND INITIALLY LOCATED TO ALLOW FOR MAXIMUM TOOL LIFE.

LTR	REVISION	CHK	APD
G	39107C- REVISED & REDRAWN ON NEW FORMAT 4/21/98 JMB		

COPIES TO

1	9	18
2	10	19
3	12	20
4	13	21
5	14	23
6	15	33
7	16	43
8	17	53

MATL SPEC	FINISH
NEOPRENE (70 DUROMETER)	BLACK

DRW	DATE	SCALE
JMB	3/2/98	4=1
CHK	DATE	SUPER DRW
APPD	DATE	RAW STK WT LBS/M

TOLERANCE UNLESS OTHERWISE SPECIFIED

TWO PLACE DEC	±.01	FRACTION	±
THREE PLACE DEC	±.005	ANGULAR	±

TITLE

RING WASHER

Littelfuse®

DES PLAINES, ILLINOIS 60016

REVISION G DRWG. NO. -901-134

UNCONTROLLED DOCUMENT

CAD GENERATED DRAWING - NO PENCIL CHANGES ALLOWED

Downloaded from Elcodis.com electronic components distributor