Tous droits strictement reserves. Reproduction ou communication a des tiers interdite sous quelque forme que ce soit sans autorisation ecrite dupropletaire. Propriete de c FCI. Droits de reproduction FCI.

All rights strictly reserved. Reproduction or issue to third parties in any form whatever is not permitted without written authority from the proprietor. Property of FCI. Copyright FCI.

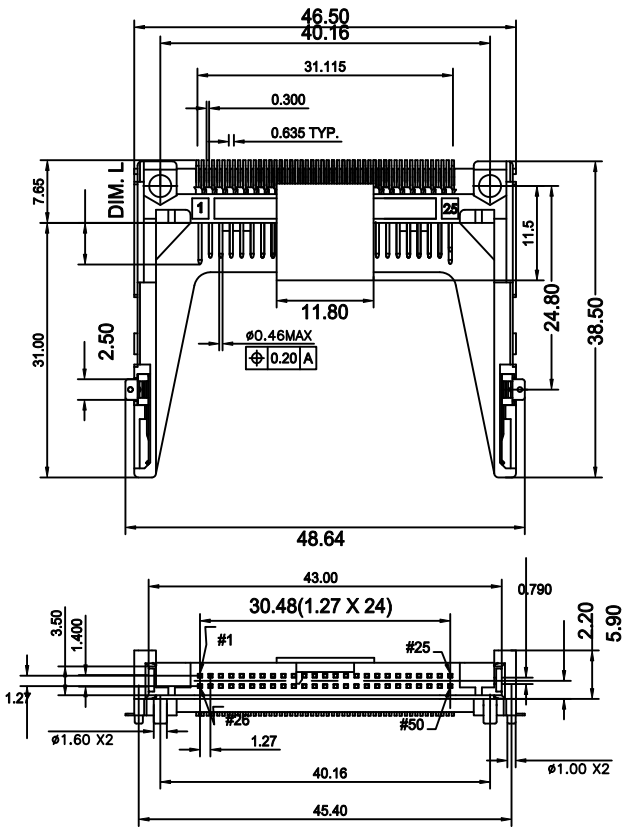

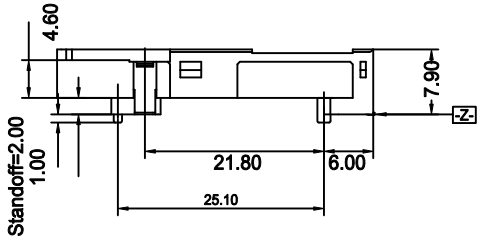

NOTES :

1. MATERIAL :
   INSULATOR : HIGH TEMPERATURE THERMOPLASTIC
   FLAMMABILITY RATING: UL94V-0
   COLOR: IVORY
   CONTACT : COPPER ALLOY
   GROUND MOUNTING EAR: COPPER ALLOY
   PICK-UP CAP: HIGH TEMP. THERMOPLASTIC. UL 94 V-0
2. PLATING :
   CONTACT AREA: SELECTIVE GOLD (SEE P/N DESCRIPTION)
   UNDER PLATING: 50u" NICKEL OVERALL
   SOLDER TAIL AREA: 100u" TIN/LEAD OR 100u" MATTE TIN
   GROUND MOUNT EAR AREA: 100u" TIN/LEAD OR 100u" MATTE TIN
3. SOLDERTAILS TO BE WITHIN 0.05 UPWARD AND 0.2 DOWNWARD FROM Z-DATUM PLACE, AND COPLANARITY OF SOLDER TAILS TO BE WITHIN 0.10mm.
4. PRODUCT SPEC: GS-12-240.
5. PACKAGING SPEC: GS-14-980.

PIN NUMBER	DIM. L±0.15
25,26	3.50
ALL OTHER PINS	4.25
1, 13, 38, 50	5.00

mat'l. code				tolerances unless otherwise specified			COSTOMER COPY	FCI www.fciconnect.com		
ltr	ecn no	dr	date		.X ± 0.30					
A	T06-0098	A.C	6/14/06	linear	.XX ± 0.20		projection	title CF HEADER TYPE II NORMAL S/O=2.0		
B	T09-1027	S.LIN	03/05/09'		.XXX ± 0.10					
C	T09-1053	S.LIN	04/13/09'	angles	0° ±2°					
				dr	ALLEN CHANG	12/16/05	MM	product family CF		code TWN
				engr	ALLEN CHANG	12/16/05		size A4	dwg no 10064420	sheet – –
				chr	STERLING LIN	12/16/05	scale NA			
				appd	H. C .LIOU	12/16/05				
sheet index	revision	C	C							
	sheet	1	2							

cage code

ACAD

Printed: Apr 15, 2009
STATUS: Released
PDM: Rev:C

Downloaded from Elcodis.com electronic components distributor

Tous droits strictement reserves. Reproduction ou communication a des tiers interdite sous quelque forme que ce soit sans autorisation ecrite dupropletaire. Propriete de c FCI. Droits de reproduction FCI.

All rights strictly reserved. Reproduction or issue to third parties in any form whatever is not permitted without written authority from the proprietor. Property of FCI. Copyright FCI.

6.Part Number Description:

P/N: **10064420–XX50XX**

- PLATING ON SOLDER TAIL AREA:
  BLANK: 100u" TIN/LEAD.
  LF: 100u" MATTE TIN.
- 1: WITHOUT PICK–UP CAP + TRAY PACKAGE.
  2: WITH PICK–UP CAP + TRAY PACKAGE.
- PIN COUNT.
- KEY TYPE:
  0: NORMAL TYPE
- GOLD PLATING:
  B: 10u" GOLD PLATE
  E: 30u" GOLD PLATE

7. THIS PRODUCT (10064420-XXXXXLF) MEETS THE EUROPEAN UNION DIRECTIVE AS DESCRIBED IN GS-22-008.

8. THIS PRODUCT (10064420-XXXXX) MEETS THE EUROPEAN UNION DIRECTIVE AS DESCRIBED IN GS-22-008 EXCEPT FOR Pb.

9. THE HOUSING WILL WITHSTAND EXPOSURE TO 260°C PEAK TEMPERATURE FOR 10 SECONDS IN A CONVECTION, IR OR VAPER PHASE REFLOW OVEN.

10. THE PRODUCTS WHERE THE PART NUMBER ENDS IN "LF" MEET THE CRITERIA SHOWN IN THE NOTES 7 AND 9.

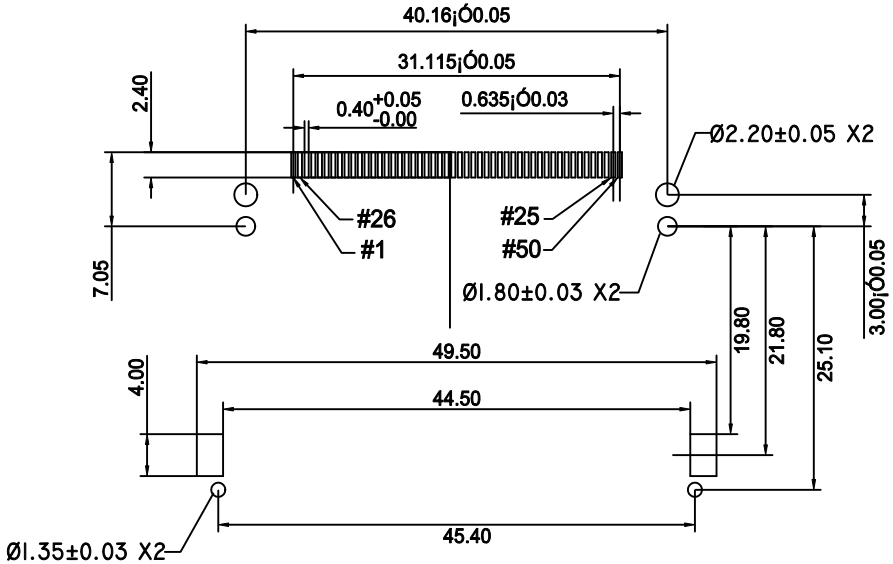

General Tolerance +/-0.05mm

Recommended PCB Pattern

mat'l. code				tolerances unless otherwise specified			COSTOMER COPY	FCI www.fciconnect.com		
ltr	ecn no	dr	date		.X ± 0.30					
A	T06–0098	A.C	6/14/06	linear	.XX ± 0.20		projection	title CF HEADER TYPE II NORMAL S/O=2.0		
B	T09–1027	S.LIN	03/05/09'		.XXX ± 0.10					
C	T09–1053	S.LIN	04/13/09'	angles	0° ±2°					
				dr	ALLEN CHANG	12/16/05	MM	product family CF		code TWN
				engr	ALLEN CHANG	12/16/05		size A4	dwg no 10064420	
				chr	STERLING LIN	12/16/05	scale NA			sheet – –
				appd	H. C .LIOU	12/16/05				
sheet index	revision sheet	C 1	C 2							

cage code

ACAD

Printed: Apr 15, 2009
STATUS: Released
PDM: Rev:C

Downloaded from Elcodis.com electronic components distributor