3 ELECTRODE NON-RADIOACTIVE SURGE ARRESTERS

PMT8 Series

DESCRIPTION

SRC Devices 3- electrode non-radioactive PMT8 GDT's are telecom grade gas-filled surge arresters. These devices are designed to meet the recommendations in CCITT-K12 and Bellcore GR-1361-CORE. The three electrode configuration is used in applications where simultaneous crowbar action of two signal lines is required. These components can be supplied with a fail-safe clip and are available with or without leads. PMT8 gas tubes function as switches which dissipate a minimum amount of energy and therefore handle currents that far surpass other types of transient voltage protection.

APPLICATIONS

- Telecom network interfaces
- Telephone line cards
- Repeaters
- Modems
- Line test equipment

FEATURES

- Non-radioactive
- Rugged ceramic-metal construction
- Low capacitance (<1pF)
- Available with fail-safe clip
- Available with or without leads
- Surface mount available
- Available in tube packaging
- Designed to meet CCITT-K12

APPROVALS

- UL File: E145795 (UL497B)

ORDERING INFORMATION

A complete part number is represented by the digits below. For example, PMT8-09004F is a 90V device with mechanical outline 04 and a fail-safe clip.

PMT8-XXX XX XX

Series
PMT8

Breakdown Voltage
090=90V
230=230V
250=250V
350=350V
400=400V

Outline
01 *10*
04 *0S*
06 *14*
See Mechanical Dimensions

Options
TR=Tape & Reel (Qty=860/Reel)
F=Fail-safe Option
Not available on S Outline

RATINGS @25°C

Parameter	Min	Typ	Max	Units
DC Breakdown Voltage (line - ground)	72	90	113	V
	184	230	276	V
	200	250	300	V
	280	350	420	V
	320	400	480	V
Insulation Resistance	10^{10}	-	-	Ω
Capacitance (line - ground)	-	-	1	pF
Capacitance (line - line)	-	-	0.5	pF
Operational Temperature	-40	-	+125	°C

(See detailed specifications for more information.)

Downloaded from Elcodis.com electronic components distributor

SPECIFICATIONS

All characteristics at 25°C

PARAMETERS	CONDITIONS	SYMBOL	PMT8-090XX MIN	PMT8-090XX TYP	PMT8-090XX MAX	PMT8-230XX MIN	PMT8-230XX TYP	PMT8-230XX MAX	PMT8-250XX MIN	PMT8-250XX TYP	PMT8-250XX MAX	UNITS
Device Specifications												
DC Breakdown (l-g)	500V/s	$V_{BD(l-g)}$	72	90	113	184	230	276	200	250	300	V
DC Breakdown (l-l)	500V/s	$V_{BD(l-l)}$	-	-	216	-	-	552	-	-	552	V
Impulse Breakdown	100V/µs	V_{bd}	-	-	500	-	-	500	-	-	500	V
(l-g)	1kV/µs	V_{bd}	-	-	800	-	-	800	-	-	800	V
Insulation Resistance	100V	IR	10^{10}	-	-	10^{10}	-	-	10^{10}	-	-	Ω
Capacitance (l-g)	1MHz	$C_{(l-g)}$	-	-	1	-	-	1	-	-	1	pF
Capacitance (l-l)	1MHz	$C_{(l-l)}$	-	-	0.5	-	-	0.5	-	-	0.5	pF
Arc Voltage	I=5A min	V_{ARC}	-	25	-	-	25	-	-	25	-	V
Life Ratings(1)												
Surge Life	100A (10/1000µs)		300	-	-	300	-	-	300	-	-	shots
Max Current Surge	10kA+10kA (8/20µs)		10	-	-	10	-	-	10	-	-	shots
AC Current	10x Isec @ 60Hz		-	-	10	-	-	10	-	-	10	A

(1)End-of-Life limits are:
DC: 50% of minimum initial DC Breakdown Voltage limit to 150% of maximum initial DC Breakdown Voltage limit
Impulse: less than 150% of initial Impulse Breakdown Voltage limit.

(2) Can withstand immersion in 260°C surface mount solder process for 1 minute.

All characteristics at 25°C

PARAMETERS	CONDITIONS	SYMBOL	PMT8-350XX MIN	PMT8-350XX TYP	PMT8-350XX MAX	PMT8-400XX MIN	PMT8-400XX TYP	PMT8-400XX MAX	UNITS
Device Specifications									
DC Breakdown (l-g)	500V/s	$V_{BD(l-g)}$	280	350	420	320	400	480	V
DC Breakdown (l-l)	500V/s	$V_{BD(l-l)}$	-	-	840	-	-	960	V
Impulse Breakdown	100V/µs	V_{bd}	-	-	600	-	-	750	V
(l-g)	1kV/µs	V_{bd}	-	-	900	-	-	1100	V
Insulation Resistance	100V	IR	10^{10}	-	-	10^{10}	-	-	Ω
Capacitance (l-g)	1MHz	$C_{(l-g)}$	-	-	1	-	-	1	pF
Capacitance (l-l)	1MHz	$C_{(l-l)}$	-	-	0.5	-	-	0.5	pF
Arc Voltage	I=5A min	V_{ARC}	-	25	-	-	25	-	V
Life Ratings(1)									
Surge Life	100A (10/1000µs)		300	-	-	300	-	-	shots
Max Current Surge	10kA+10kA (8/20µs)		10	-	-	10	-	-	shots
AC Current	10x Isec @ 60Hz		-	-	10	-	-	10	A

(1)End-of-Life limits are:
DC: 50% of minimum initial DC Breakdown Voltage limit to 150% of maximum initial DC Breakdown Voltage limit
Impulse: less than 150% of initial Impulse Breakdown Voltage limit.

Downloaded from Elcodis.com electronic components distributor

MECHANICAL DIMENSIONS

01 Outline

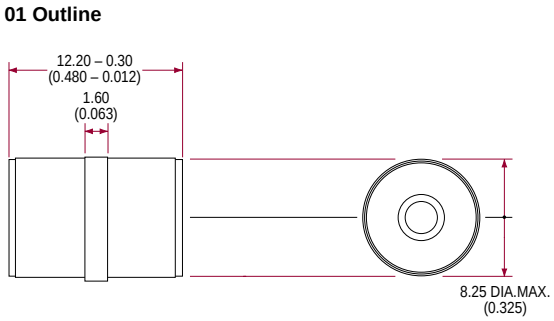

04 Outline

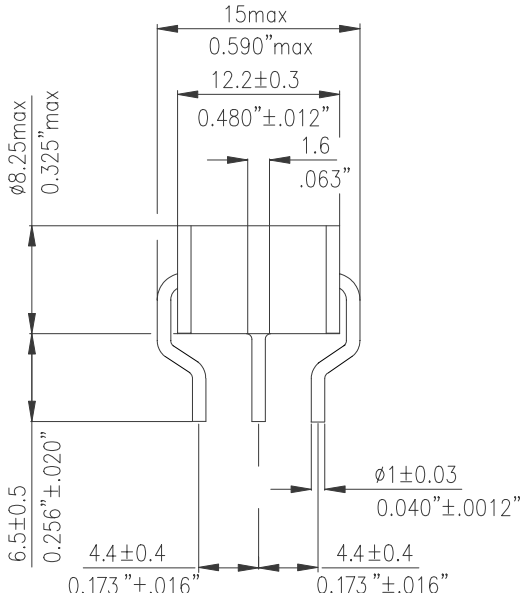

10 Outline

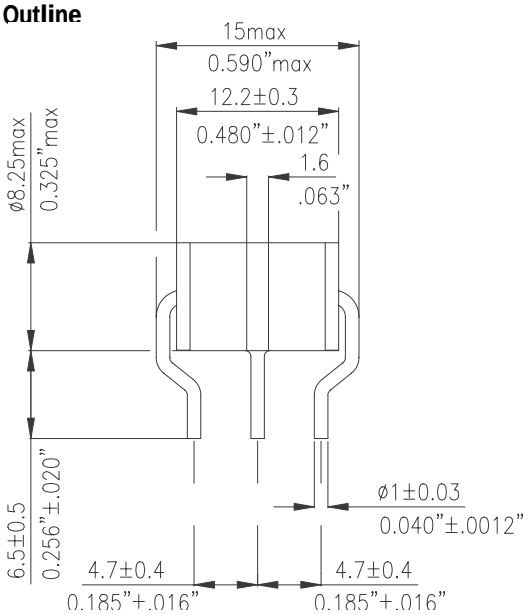

06 Outline

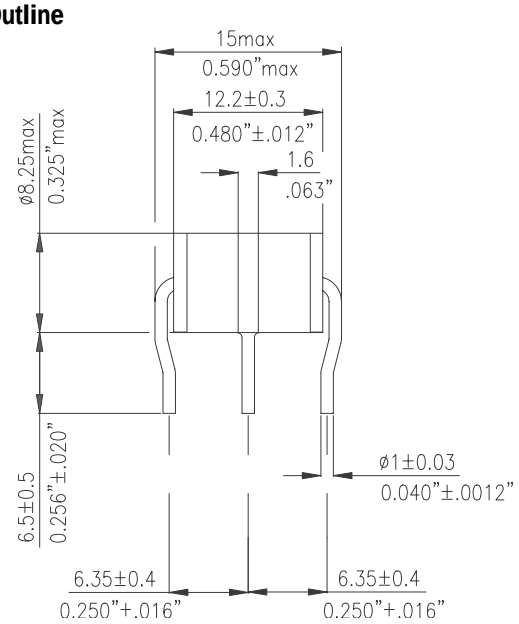

Downloaded from Elcodis.com electronic components distributor

MECHANICAL DIMENSIONS

S Outline
See Note 2

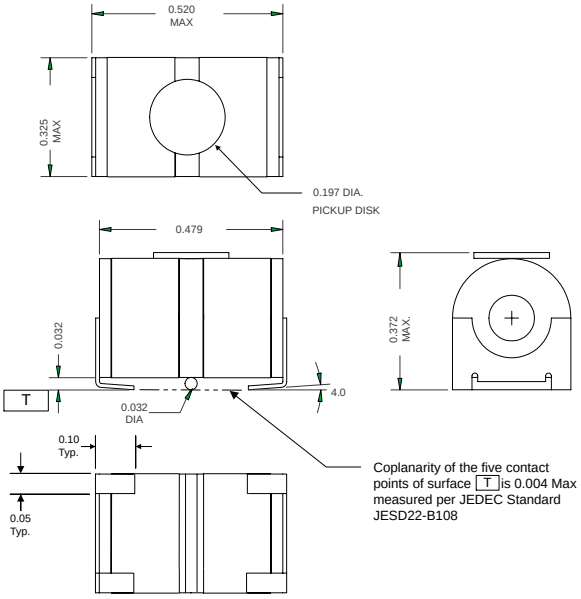

14 Outline

14 Outline

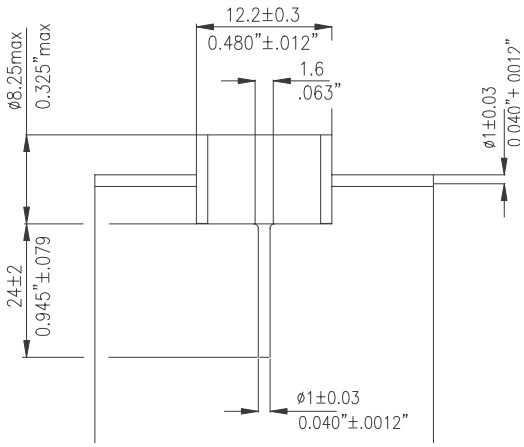

Recommended Land Pattern "S" Outline

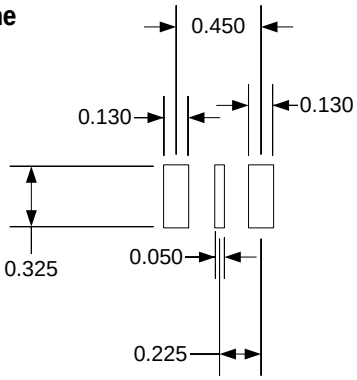

Tape & Reel Packaging S Outline

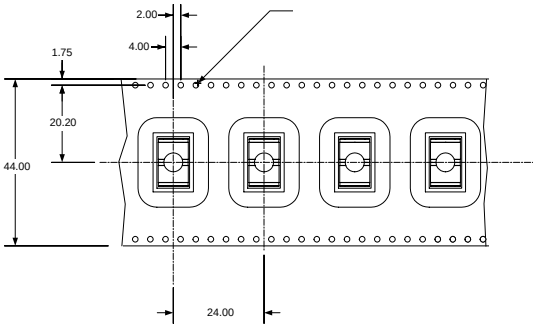

PMT8XXX0S Tape Dimensions
13" Reel 164 parts
22" Reel 861 parts

Failsafe Outline

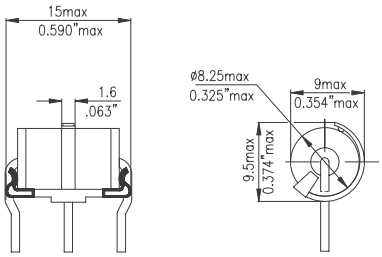

Downloaded from Elcodis.com electronic components distributor