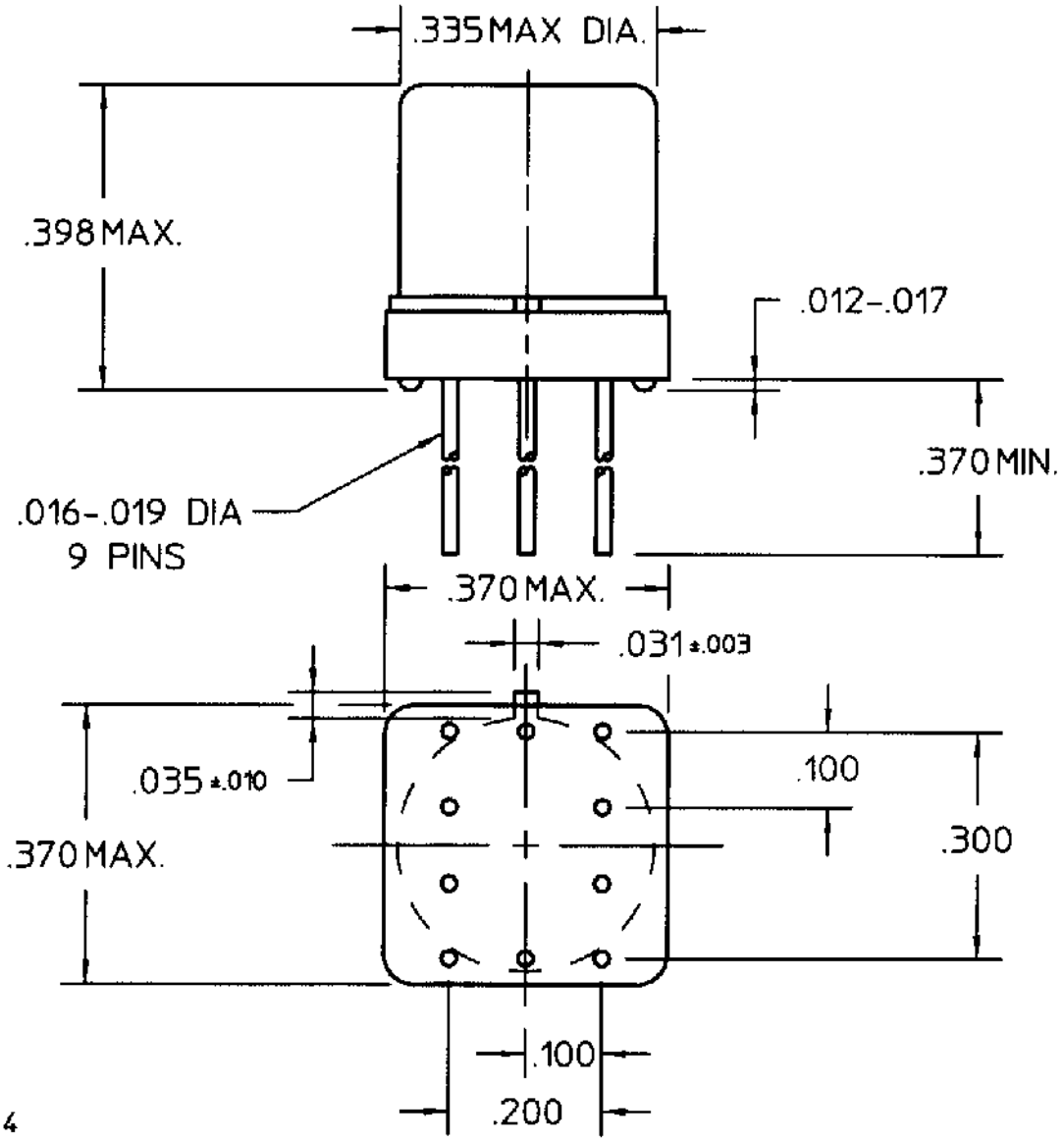

REV. 0
DCO 142074

COIL: @ 25°C

RESISTANCE	1560 OHMS 10%
NOMINAL VOLTAGE	26.5 VDC
MUST OPERATE	14.2 VDC
	0.13 mADC
MUST RELEASE	8.0 VDC MAX, 1.37 VDC MIN.

ENVIRONMENT:

VIBRATION 10 CPS TO 3000 CPS @ 30 g's

SHOCK 75 g's 6 MS. DURATION

TEMPERATURE -65 °C TO +125 °C

NOTES:

TURN-ON TIME 2.0 MS MAX

TURN-OFF TIME 7.5 MS MAX

CONTACT STABILIZATION 2.0 MS MAX

CUSTOMER DATA SHEET

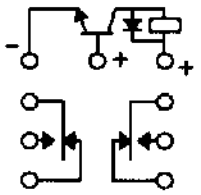

TERMINAL VIEW

CONTACT RATING: LOW LEVEL TO 1A 28 VDC RESISTIVE 100,000 OPERATIONS

DR. PBB 6/6/00 CK. 6/6/00

COMMUNICATIONS INSTRUMENTS, INC.

CUST. OPL
CUST. NO. M28776/1-036P REV.

"JMAT" RELAY

JMACT-26XPS

F-718 REV 2

Downloaded from Elcodis.com electronic components distributor