samtec

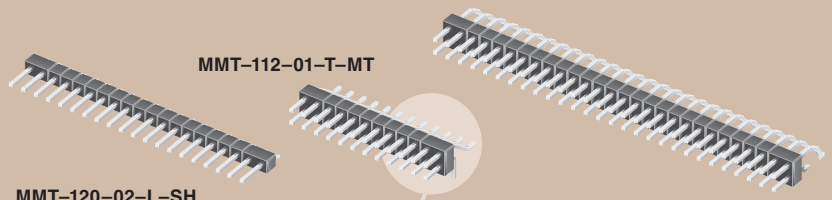


**(2,00mm) .0787"**

**MMT SERIES**

# HORIZONTAL SURFACE MOUNT HEADER

## SPECIFICATIONS

For complete specifications and recommended PCB layouts see www.samtec.com?MMT

**Insulator Material:**
Black Liquid Crystal Polymer
FILE NO. E111594

**Terminal Material:**
Phosphor Bronze

**Plating:**
Au or Sn over
50µ" (1,27µm) Ni

**Current Rating:**
3A @ 80°C ambient

**Operating Temp Range:**
-55°C to +105°C with Tin;
-55°C to +125°C with Gold

**RoHS Compliant:**
Yes

### Processing:

**Lead–Free Solderable:**
Yes

**SMT Lead Coplanarity:**
(0,10mm) .004" max (02-25)
(0,15mm) .006" max (26-36)

**Mates with:**
CLT, SQT, SQW, ESQT, TLE, SMM, MMS, TCSD

**APPLICATIONS**

**APPLICATION SPECIFIC OPTIONS**

Alignment pins, locking clips, and molded Pick & Place Pads available. Call Samtec.

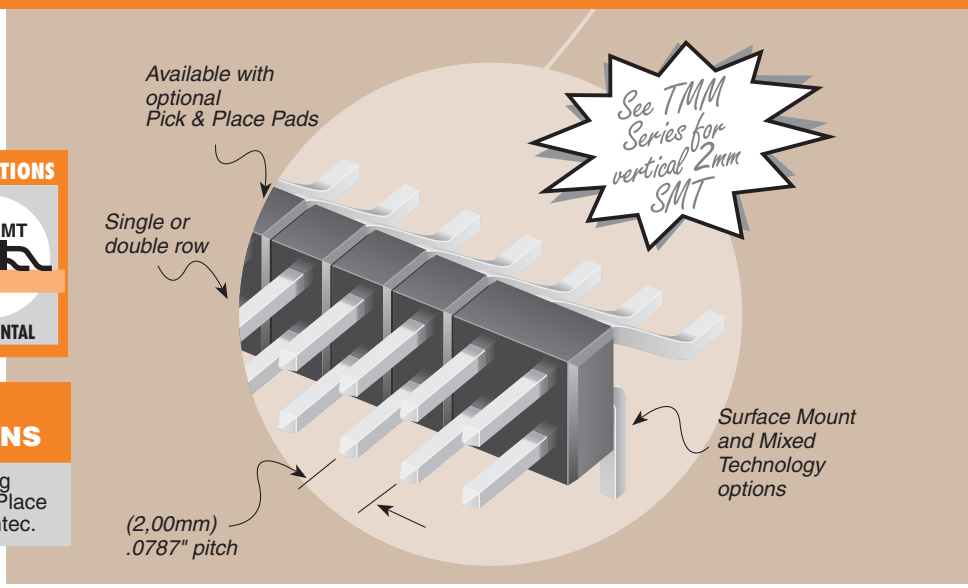


| MMT | – | 1 | NO. PINS PER ROW | – | LEAD STYLE | – | PLATING OPTION | – | ROW OPTION | – | OPTION |
|---|---|---|---|---|---|---|---|---|---|---|---|
| | | | 02 thru 36 | | –01 = (3,20) .126 post<br>–02 = (4,45) .175 post | | –L = 10µ" (0,25µm) Gold post, Matte Tin on tail<br>–T = Matte Tin | | –SH = Single Row<br>–DH = Double Row<br>–MT = Double Row Mixed Technology | | –K = (4,00mm) .157" DIA Polyimide Film Pick & Place Pad (3 positions minimum)<br>–P = Pick & Place Pad (2 positions minimum)<br>–"XXX" = Polarized Position Specify position of omitted pin<br>–TR = Tape & Reel Packaging |

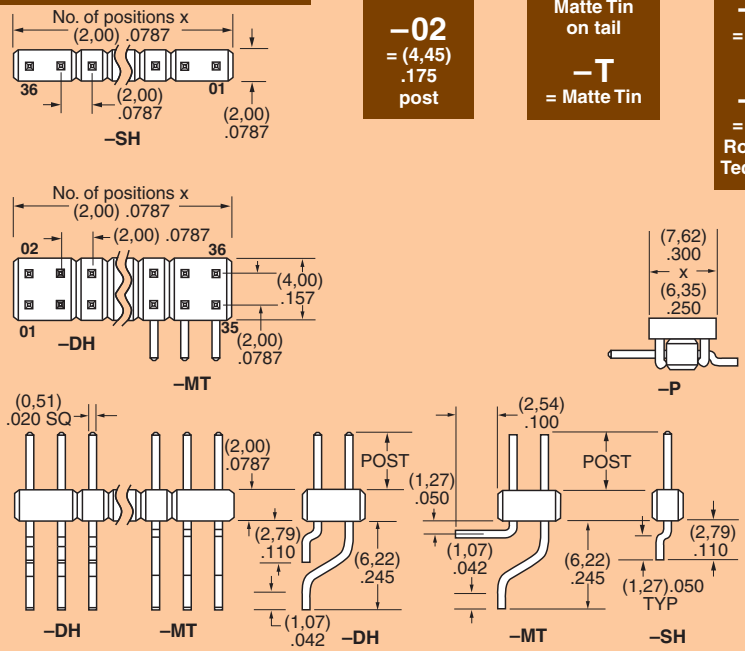


**TAPE & REEL AVAILABILITY**

No tooling charges.
Minimum order is the lesser of a full reel quantity or 125 pieces.
Order any quantity above minimum.
In-house design, manufacture.
Quick turn-around.

Call Samtec for specifications and ordering information.

**Note:** Other Gold plating options available. Contact Samtec.

**Note:** Some lengths, styles and options are non-standard, non-returnable.

*Due to technical progress, all designs, specifications and components are subject to change without notice.*



SAMTEC USA • Tel: 1-800-SAMTEC-9 or 812-944-6733 SAMTEC SILICON VALLEY • Tel: 408-395-5900 SAMTEC SOUTHERN CALIFORNIA • Tel: 1-800-726-8329
SAMTEC AMERICA LATINA COMERCIO EXTERIOR LTDA • Tel: (+55 31) 3786 3227 SAMTEC UNITED KINGDOM • Tel: 44 01236 739292 SAMTEC GERMANY • Tel: +49 (0) 89 / 89460-0
SAMTEC FRANCE • Tel: 33 01 60 95 06 60 SAMTEC ITALY • Tel: 39 039 6890337 SAMTEC NORDIC/BALTIC • Tel: +46-84477280 SAMTEC BENELUX • Tel: 44 01236 739292 SAMTEC ISRAEL • Tel: 972-3-7526600
SAMTEC INDIA • Tel: +91-80-3272 1612 SAMTEC ASIA PACIFIC • Tel: 65 6745-5955 SAMTEC JAPAN • Tel: 045-475-1385 SAMTEC CHINA • Tel: 86-21-61103766 SAMTEC TAIWAN • Tel: 886-2-2735-6109
SAMTEC HONG KONG • Tel: 852-2804 4458 SAMTEC KOREA • Tel: 82-31-717-5685 SAMTEC ANZ • Tel: 613 9512 7747 SAMTEC SOUTH AFRICA • Tel: 27 11 452 8112

Downloaded from Elcodis.com electronic components distributor