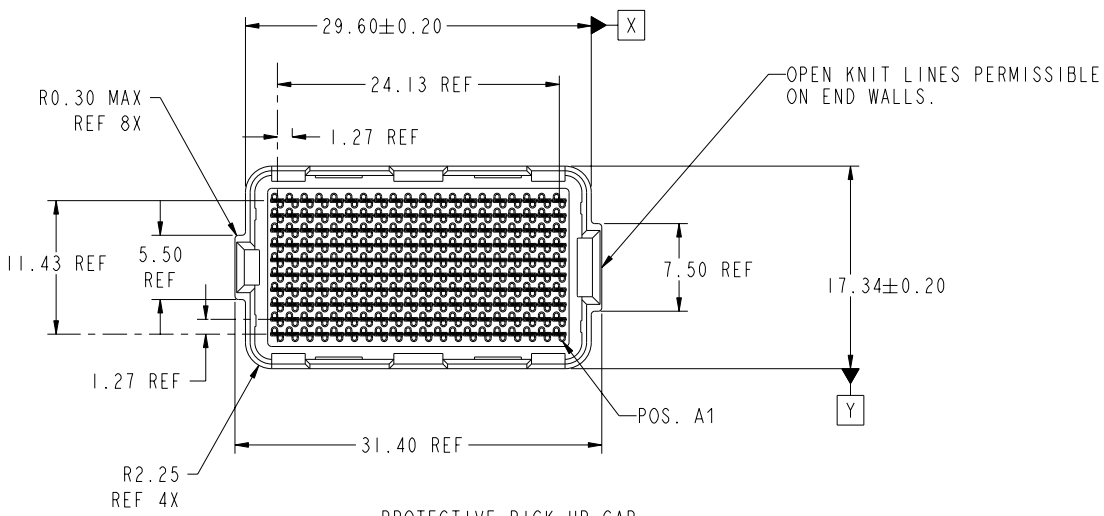

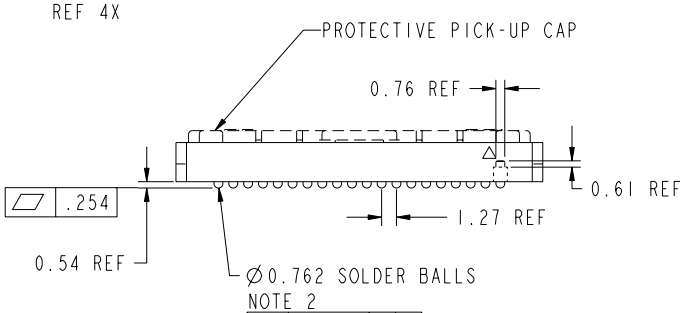

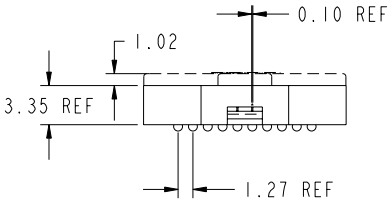

mat'l code	SEE NOTE 1

ltr	ecn no.	dr	date
A	V10242	DRW	11-15-01
B	V20006	DRW	1-24-02
C	V03-0680	DAI	06/20/03
D	V04-0940	VS	10/09/04
E	V06-0560	LP	2006/07/14

tolerances unless otherwise specified	
linear	0.X ±0.3
	0.XX ±0.10
	0.XXX ±0.050
angles	0° ±2°
dr	D. WAUGHEN 11-15-01
engr	J. KONTOS 11-15-01
chr	J. KONTOS 11-15-01
appd	J. KONTOS 11-15-01

CUSTOMER COPY

projection

MM

scale 2:1

FCI www.fciconnect.com

title 0mm PLUG ASSY. 10x20=200 POS.

product family MEG-ARRAY

code 213

size A

dwg no 84516

sheet 1 of 5

sheet index	revision sheet	E 1	E 2	E 3	E 4	E 5

cage code 22526

Pro/E

PDM: Rev:E STATUS:Released Printed: Dec 01, 2010

This document is the property of and embodies CONFIDENTIAL and PROPRIETARY information of FCI. No part of the information shown on this document may be used in any way or disclosed to others without the written consent of FCI. Copyright FCI.

REV E - 2006-04-18

Downloaded from Elcodis.com electronic components distributor

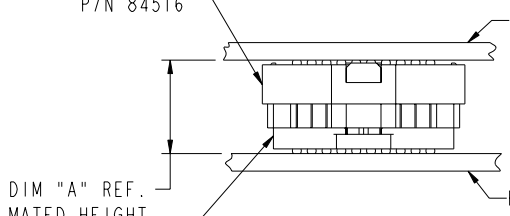

END VIEW - MATED CONNECTORS

MATED HEIGHT AFTER REFLOW IS BASED ON ∅0.64mm PAD (METAL DEFINED) AND 0.13mm SOLDER PASTE STENCIL THICKNESS. SEE NOTE 3.

MATED HEIGHT TABLE		
DIM "A"	RECPT. ASSY. P/N	-2XX PLATING
4.0	84517	SEE NOTE 4
6.0	55724	SEE NOTE 5
8.0	84535	SEE NOTE 5

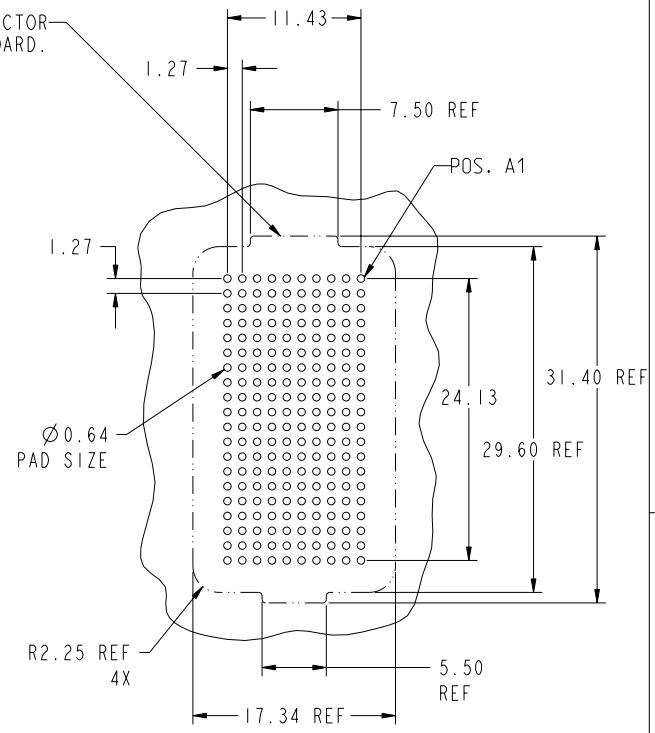

BOARD PATTERN

mat'l code	SEE NOTE 1			tolerances unless otherwise specified		CUSTOMER COPY	FCI www.fciconnect.com
ltr	ecn no.	dr	date	linear	0.X ±0.3		
E					0.XX ±0.10	projection	title 0mm PLUG ASSY. 10x20=200 POS.
					0.XXX ±0.050		
				angles	0° ±2°		
				dr	D. WAUGHEN 11-15-01	MM	product family MEG-ARRAY code 213
				engr	J. KONTOS 11-15-01		size A dwg no 84516 sheet 2
				chr	J. KONTOS 11-15-01	scale 2:1	
				appd	J. KONTOS 11-15-01		
sheet index	revision sheet						cage code 22526

This document is the property of and embodies CONFIDENTIAL and PROPRIETARY information of FCI. No part of the information shown on this document may be used in any way or disclosed to others without the written consent of FCI. Copyright FCI.

REV E - 2006-04-18

Pro/E

PDM: Rev:E STATUS:Released Printed: Dec 01, 2010

Downloaded from Elcodis.com electronic components distributor

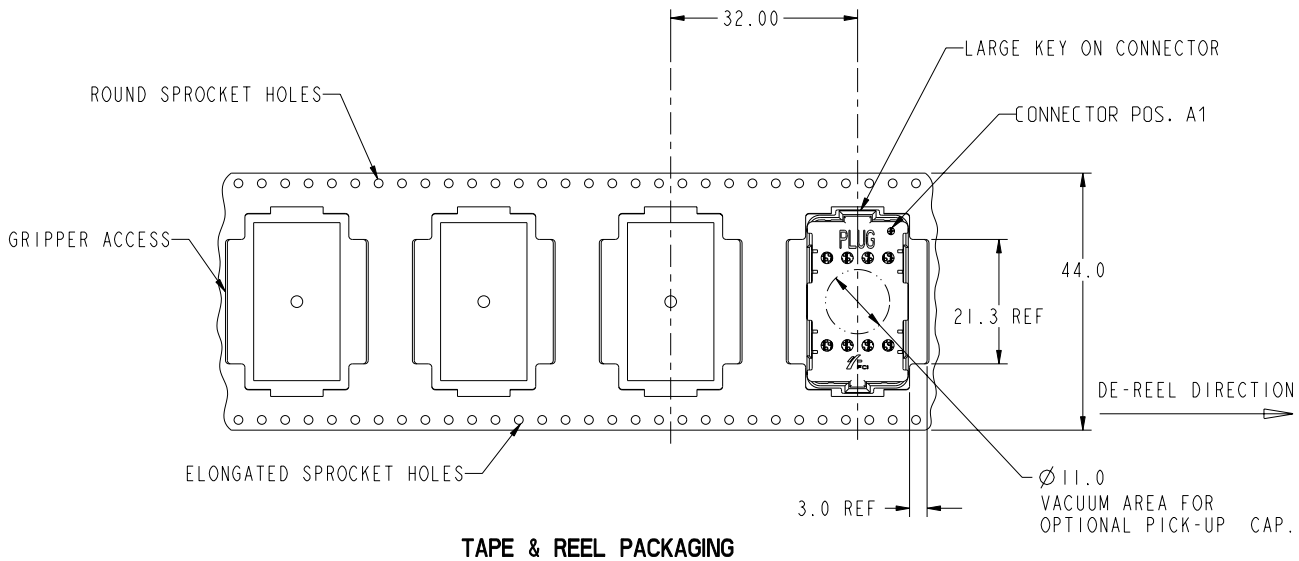

TAPE & REEL PACKAGING

PER EIA 481-3

mat'l code	SEE NOTE 1			tolerances unless otherwise specified		CUSTOMER COPY	FCI www.fciconnect.com
ltr	ecn no.	dr	date	linear	0.X ±0.3	projection	title 0mm PLUG ASSY. 10x20=200 POS.
E					0.XX ±0.10		
					0.XXX ±0.050		
				angles	0° ±2°		
				dr	D. WAUGHEN 11-15-01	MM	product family MEG-ARRAY / code 213
				engr	J. KONTOS 11-15-01		size A / dwg no 84516 / sheet 3
				chr	J. KONTOS 11-15-01	scale 1:1	
				appd	J. KONTOS 11-15-01		
sheet index	revision sheet						

cage code 22526

Pro/E

PDM: Rev:E STATUS:Released Printed: Dec 01, 2010

This document is the property of and embodies CONFIDENTIAL and PROPRIETARY information of FCI. No part of the information shown on this document may be used in any way or disclosed to others without the written consent of FCI. Copyright FCI.

REV E - 2006-04-18

Downloaded from Elcodis.com electronic components distributor

PRODUCT NO.	PICK-UP CAP		SOLDER BALL
84516-002	YES	15"(.38) Au OVER Ni	SnPb
84516-002LF			SnAgCu LEAD FREE ⑦⑧
84516-102	YES	30"(.76um) Au OVER Ni	SnPb
84516-102LF			SnAgCu LEAD FREE ⑦⑧
84516-202	YES	SEE MATED HEIGHT TABLE ON SHEET 2	SnPb
84516-202LF			SnAgCu LEAD FREE ⑦⑧

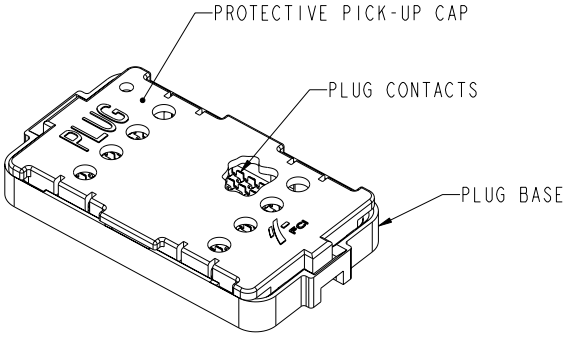

TOP VIEW

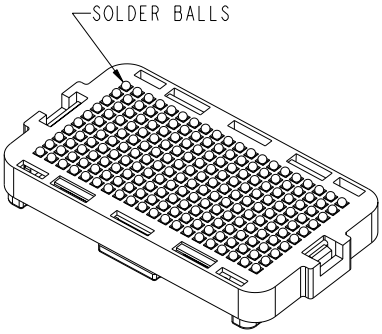

BOTTOM VIEW

mat'l code	SEE NOTE 1	tolerances unless otherwise specified	CUSTOMER COPY
ltr / ecn no. / dr / date		linear: 0.X ±0.3; 0.XX ±0.10; 0.XXX ±0.050	projection
E		angles: 0° ±2°	MM
		dr: D. WAUGHEN 11-15-01	scale 2:1
		engr: J. KONTOS 11-15-01	
		chr: J. KONTOS 11-15-01	
		appd: J. KONTOS 11-15-01	
sheet index / revision sheet			

FCI www.fciconnect.com

title: 0mm PLUG ASSY. 10x20=200 POS.

product family: MEG-ARRAY | code: 213

size: A | dwg no: 84516 | sheet: 4

cage code: 22526

Pro/E

PDM: Rev:E STATUS: Released Printed: Dec 01, 2010

This document is the property of and embodies CONFIDENTIAL and PROPRIETARY information of FCI. No part of the information shown on this document may be used in any way or disclosed to others without the written consent of FCI. Copyright FCI.

REV E - 2006-04-18

Downloaded from Elcodis.com electronic components distributor

NOTES:

1. MAT'L:
   HOUSING: LCP
   CONTACT: COPPER ALLOY

   PLATNG CONTACT: SEE TABLE ON SHEET 4
   SOLDER BALL: SEE TABLE ON SHEET 4
   EUTECTIC SnPb OR LEAD FREE
   95.5Sn/4Ag/0.5Cu

2. SOLDER BALLS WILL NOT BE PERFECT SPHERICAL SHAPE DUE TO REFLOW ATTACHMENT.

3. MATED HEIGHT EFFECTED BY CUSTOMER'S PCB PAD SIZE, PLATING, SOLDER REFLOW PROFILE & SOLDER PASTE.

4. PLATING FOR INDICATED -2XX SERIES PART NOS. MEETS THE REQUIREMENTS OF NORTEL NPS25298-2 (CENTRAL OFFICE ENVIRONMENT, 25 YEAR LIFE EXPECTANCY).

5. PLATING FOR INDICATED -2XX SERIES PART NOS. IS Au OVER Ni WITH SPECIAL CONTACT GEOMETRY TO MEET REQUIREMENTS OF TELCORDIA GR-1217-CORE: CENTRAL OFFICE ENVIRONMENT.

6. SEE SK-47384 FOR MATING RESTRICTIONS WITH EARLIER DESIGN VERSIONS.

7. FOR PROPER APPLICATION FOLLOW FCI APPLICATION SPECIFICATION GS-20-033. LEAD FREE SOLDER BALLS WILL NOT SOLDER PROPERLY IN A LEADED SOLDER PROSESS DUE TO A HIGHER REFLOW TEMPERATURE LEAD FREE PRODUCT IS THEREFORE NOT BACKWARDS COMPATIBLE WITH LEADED OR SOME SOLDERING APPLICATIONS. REFERENCE FCI FCI APPLICATION SPECIFICATION

8. THIS PRODUCT MEETS EUROPEAN UNION DIRECTIVE AND OTHER COUNTRY REGULATIONS AS DESCRIBED IN GS-22-008. PRODUCT MEETING THIS DIRECTIVE IS IDENTIFIED IN THE LOT CODE NUMBER MARKED ON EACH PART BY HAVING AN "X" IN THE SEVENTH CHARACTER POSITION

This document is the property of and embodies CONFIDENTIAL and PROPRIETARY information of FCI. No part of the information shown on this document may be used in any way or disclosed to others without the written consent of FCI. Copyright FCI.

mat'l code	material_code			tolerances unless otherwise specified				CUSTOMER COPY	FCI www.fciconnect.com	
ltr	ecn no.	dr	date							
E	-	-	-	linear				projection	title	0mm PLUG ASSY. 10x20=200 POS.
				angles						
				dr	D. WAUGHEN	11-15-01		MM	product family MEG-ARRAY	code 213
				engr	J. KONTOS	4-17-01			size A / dwg no 84516	sheet 5
				chr	J. KONTOS	11-15-01		scale 2:1		
				appd	J. KONTOS	11-15-01				
sheet index	revision sheet									

cage code 22526

Pro/E

REV E - 2006-04-18

PDM: Rev:E STATUS:Released Printed: Dec 01, 2010

Downloaded from Elcodis.com electronic components distributor