PRODUCT NUMBER	PCB THICKNESS	DIM "A"
88945–X02	1.6	2.90
88945–X12	2.4	3.53
88945–X02LF	1.6	2.90
88945–X12LF	2.4	3.53

PLATING CONTACT AREA:	
DASH NR:	PERFORMANCE LEVEL
–1YY/1YYLF	TELCORDIA CO
–2YY/2YYLF	CUSTOMER SPECIAL
–3YY/3YYLF	CUSTOMER SPECIAL

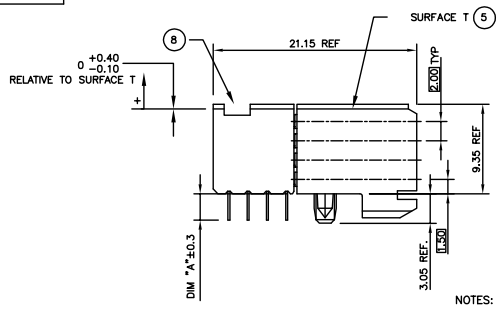

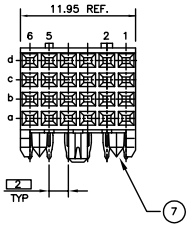

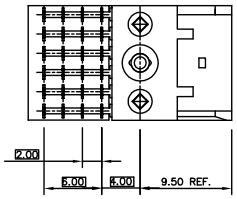

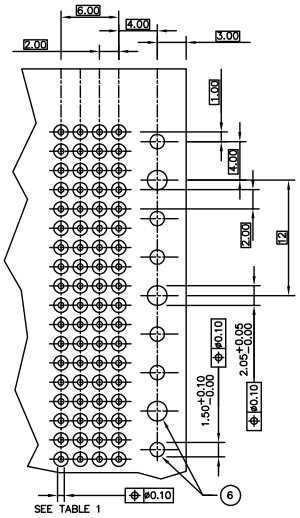

RECOMMENDED PC BOARD LAYOUT, COMPONENT SIDE.

TABLE 1	
PLATED THRU HOLE REQUIREMENTS	
HOLE DIAMETER AFTER PLATING	0.65–0.80
DRILLED HOLE	0.81–0.86 (0.85 DRILL)
COPPER PLATING	0.025 – 0.05
SnPb PLATING	0.005–0.015

NOTES:

1. CONNECTOR MATERIALS:
   HOUSING: LCP, 30% GLASS FILLED, UL 94–V0 COMPLIANT
   TERMINAL: PHOSPHOR BRONZE ALLOY
2. PRESS–FIT TAIL PLATING: 0.5–1.5 µm TIN LEAD
3. PRODUCT SPECIFICATION: GS–12–002
4. APPLICATION SPECIFICATIONS: BUS–20–061, GS–20–001, TA–941
5. PRODUCT MARKING: (PART NUMBER & LOT CODE).
6. INDICATED HOLES ARE UNPLATED.
7. DIAMOND LOCATION PEG ARE ONLY EXISTED ON THE BOTH SIDES OF PRODUCT.
8. TOP SURFACE OF PRESS BLOCK MAY EXTEND UP TO 0.4MM HIGHER THAN HOUSING. THIS MAY AFFECT THE TAIL LENGTH BEFORE APPLICATION TO A BOARD.
9. THESE PRODUCTS WHERE THE PART NUMBER ENDS IN "LF" MEET THE EUROPEAN UNION DIRECTIVES AND OTHER COUNTRY REGULATIONS AS DESCRIBED IN GS–22–008.
   ALL PRODUCTS WILL WITHSTAND EXPOSURE TO 240°C FOR 60 SECONDS IN A CONVECTION, INFAR–RED OR VAPOR PHASE REFLOW OVEN.
10. For PLATING SPEC, REFER TO DRAWING 10097866.
    FOR LEAD FREE PART NUMBERS ADD "LF" SUFFIX. EXAMPLE: 88945–XYYLF.

mat'l. code SEE NOTES				tolerances unless otherwise specified			
ltr	ecn no	dr	date				
K	DG07–0170	Cenh	05/22/07	linear	.X ±.3		
L	DG08–0171	TER	9/12/08		.XX ±.10		
M	DG09–0068	Cenh	03/03/09	angles	.XXX ±.050		
N	DG10–0155	Cenh	04/22/10		0° ±2°		
				dr	S.STONER	10/29/92	
				engr	R.DOUTRICH	10/29/92	
H	V05–0074	LP	4/12/05	chr	S.STONER	10/29/92	
J	V05–0522	DAI	6/8/05	appd	S.STONER	10/29/92	
sheet index	revision sheet	N 1					

CUSTOMER COPY

projection

MM

scale 1:1

FCI www.fciconnect.com

title B SERIES R/A SIGNAL RECEPT ASSY 4 ROW, 1 MOD, PF

product family METRAL (tm)

code 213

size A dwg no 88945

sheet 1 of 1

cage code 22526

ACAD

PDM: Rev:N STATUS: Released Printed: Jun 30, 2010

Tous droits strictement reservés. Reproduction ou communication a des tiers interdite sous quelque forme que ce soit sans autorisation ecrite du propietaire. Propriété de c FCI. Droits de reproduction FCI.

All rights strictly reserved. Reproduction or issue to third parties in any form whatever is not permitted without written authority from the proprietor. Property of FCI. Copyright FCI.

Downloaded from Elcodis.com electronic components distributor