630-008
EMI/RFI Environmental Bulkhead Feed-Through
with Strain Relief
Front and Rear Panel Mount - Straight

Single Overall EMI/RFI Shield Termination

630 A 008 NF 06 2 F

- Product Series — 630
- Fitting Type — A
  - A = Rear Mount
  - B = Front Mount
- Basic Part No. — 008
- Finish (Table II) — NF
- Cable Entry (Table III) — 06
- Fitting Style — 2
  - 1 = RFI/EMI Only
  - 2 = RFI/EMI Environmental
- Strain Relief Style (G, F) — F

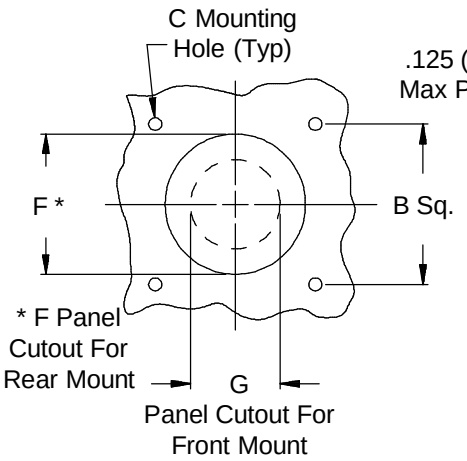

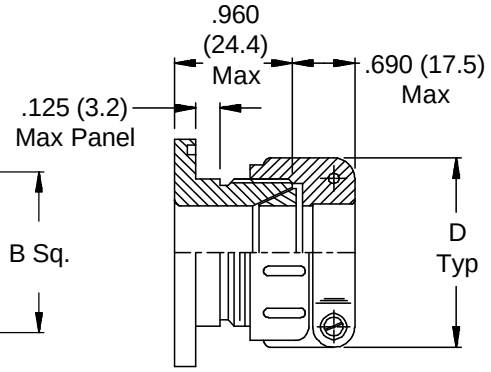

Style 1
RFI/EMI
Rear Mount Type A
(Shown With Style F
Strain Relief)

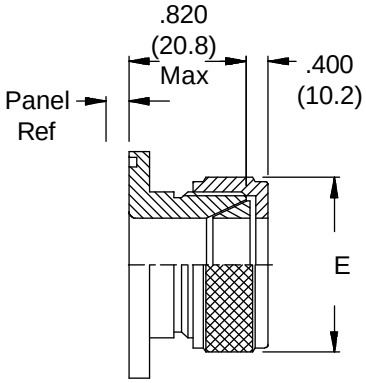

Style 1
RFI/EMI
Front Mount Type B
(Shown With Style G
Gland Nut)

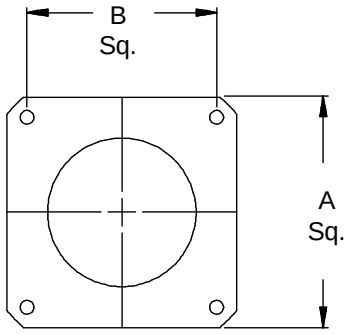

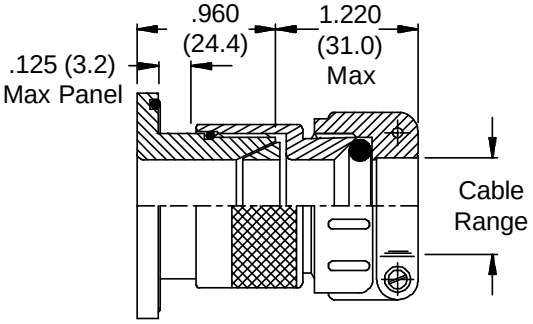

Style 2
RFI/EMI Environmental
Rear Mount Type A
(Shown With Style F
Strain Relief)

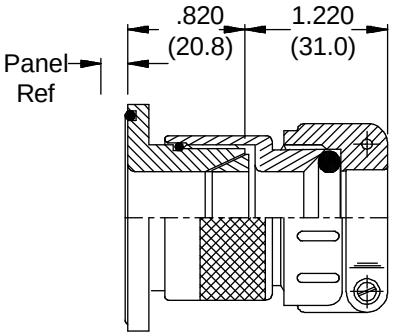

Style 2
RFI/EMI Environmental
Front Mount Type A
(Shown With Style F
Strain Relief)

© 2005 Glenair, Inc. CAGE Code 06324 Printed in U.S.A.

Downloaded from Elcodis.com electronic components distributor

See inside back cover fold-out or page 14 for Table II.

TABLE III: CABLE ENTRY

Dash No.	Cable Range Min		Cable Range Max		A Max		B Dim		C +.015 - 0	(+0.4) (-0.0)
01	.125	(3.2)	.250	(6.4)	.885	(22.5)	.593	(15.1)	.120	(3.0)
02	.156	(4.0)	.375	(9.5)	1.104	(28.0)	.812	(20.6)	.120	(3.0)
03	.250	(6.4)	.438	(11.1)	1.197	(30.4)	.906	(23.0)	.120	(3.0)
04	.280	(7.1)	.500	(12.7)	1.291	(32.8)	.968	(24.6)	.120	(3.0)
05	.375	(9.5)	.625	(15.9)	1.385	(35.2)	1.062	(27.0)	.120	(3.0)
06	.500	(12.7)	.750	(19.1)	1.635	(41.5)	1.250	(31.8)	.120	(3.0)
07	.625	(15.9)	.875	(22.2)	1.760	(44.7)	1.375	(34.9)	.147	(3.7)
08	.750	(19.1)	1.000	(25.4)	2.010	(51.1)	1.562	(39.7)	.147	(3.7)
09	.875	(22.2)	1.125	(28.6)	2.260	(57.4)	1.750	(44.5)	.173	(4.4)
10	1.000	(25.4)	1.250	(31.8)	2.510	(63.8)	1.938	(49.2)	.173	(4.4)

TABLE III (Continued)

Dash No.	D Max		E Max		F +.015 - 0	(+0.4) (-0.0)	G +.031 - 0	(+0.8) (-0.0)
01	.843	(21.4)	.625	(15.9)	.515	(13.1)	.250	(6.4)
02	.968	(24.6)	.750	(19.1)	.640	(16.3)	.375	(9.5)
03	1.046	(26.6)	.875	(22.2)	.765	(19.4)	.438	(11.1)
04	1.156	(29.4)	1.000	(25.4)	.890	(22.6)	.500	(12.7)
05	1.218	(30.9)	1.125	(28.6)	1.015	(25.8)	.625	(15.9)
06	1.343	(34.1)	1.250	(31.8)	1.140	(29.0)	.750	(19.1)
07	1.468	(37.3)	1.375	(34.9)	1.265	(32.1)	.875	(22.2)
08	1.593	(40.5)	1.500	(38.1)	1.390	(35.3)	1.000	(25.4)
09	1.718	(43.6)	1.625	(41.3)	1.515	(38.5)	1.125	(28.6)
10	1.843	(46.8)	1.750	(44.5)	1.640	(41.7)	1.250	(31.8)

1. Metric dimensions (mm) are indicated in parentheses.
2. Cable range is defined as the accommodations range for the wire bundle or cable. Dimensions shown are not intended for inspection criteria.

© 2005 Glenair, Inc. CAGE Code 06324 Printed in U.S.A.

Downloaded from Elcodis.com electronic components distributor