VDR Metal Oxide Varistors High Surge

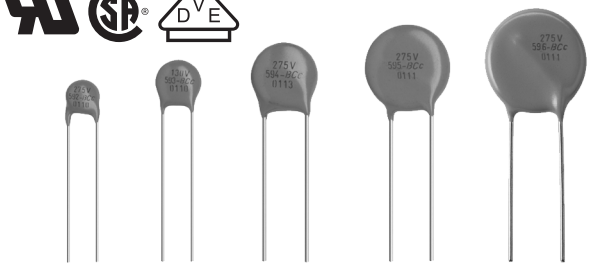

FEATURES

- Zinc oxide disc, epoxy coated
- Straight or kinked leads
- Higher current surge/size ratio capability up to 10 kA for H20 types
- Compliant to RoHS directive 2002/95/EC and in accordance to WEEE 2002/96/EC
- Certified according to UL 1449 edition 3, VDE/IEC 61051-1/2 and CSA

RoHS COMPLIANT

QUICK REFERENCE DATA		
PARAMETER	**VALUE**	**UNIT**
Maximum continuous voltage in operating temperature range:		
RMS	11 to 680	V
DC	14 to 895	V
Maximum non-repetitive transient current I_{NRP} (8 x 20 µs)	250 to 10 000	A
Detailed specification	Based on IEC 61051-1 IEC 61051-2 IEC 61051-2-2	
Storage temperature	- 40 to + 150	°C
Operating temperature	- 40 to + 125	°C

ORDERING INFORMATION

The varistors are available in a number of packaging options:

- Bulk
- On tape on reel
- On tape in ammopack

The basic ordering code for each option is given in tables titled Varistors on Tape on Reel, Varistors on Tape in Ammopack and Varistors in Bulk. To complete the catalog number and to determine the required operating parameters, see Electrical Data and Ordering Information table.

APPLICATION

- Overvoltage and transient voltage protection

DESCRIPTION

The varistors consist of a disc of low-ß ceramic material with two tinned solid copper leads or tinned copper clad steel wire. They are coated with a layer of ochre colored epoxy, which provides electrical, mechanical and climatic protection. The encapsulation is resistant to all cleaning solvents in accordance with IEC 60068-2-45.

MOUNTING

The varistors are suitable for processing on automatic insertion and cutting and bending equipment.

Typical Soldering

235 °C, duration: 5 s (Pb-bearing)
245 °C, duration: 5 s (lead (Pb)-free)

Resistance to soldering heat

260 °C; duration: 10 s max.

MARKING

The varistors are marked with the following information:

- Maximum continuous RMS voltage
- Series number (582, 583, 584, 585 or 586)
- Manufacture logo
- Date of manufacture (YYWW)

INFLAMMABILITY

The varistors are non-flammable. The encapsulation is made of flammable-resistant epoxy lacquer in accordance with UL 94 V-0.

Downloaded from Elcodis.com electronic components distributor

ELECTRICAL DATA AND ORDERING INFORMATION

MAXIMUM CONTINUOUS VOLTAGE		VOLTAGE [3] at 1 mA	MAXIMUM VOLTAGE at STATED CURRENT		MAXIMUM ENERGY [4] (10 x 1000 µs)	MAXIMUM NON-REP. TRANSIENT CURRENT [5] I_{NRP} (8 x 20 µs)	TYPICAL CAPACITANCE at 1 kHz	T (max.)	E	UL 1449 ED3 SPD TYPE [8]	CATALOG NUMBERS [1]	
RMS [2] (V)	DC (V)	(V)	V (V)	I (A)	(J)	(A)	(pF)	(mm)	(mm)		SAP [7]	12NC [6] 2381-
11	14	18	40	1.0	0.7	250	1600	3.4	0.5 ± 0.3	4	VDRH05B011xyE	582 x110y
			36	2.5	1.5	500	3600	3.4	0.5 ± 0.3	4	VDRH07D011xyE	583 x110y
			36	5.0	2.6	1000	8000	3.8	0.7 ± 0.3	4	VDRH10G011xyE	584 x110y
			36	10.0	5.2	2000	20 000	3.8	0.7 ± 0.3	4	VDRH14M011xyE	585 x110y
			36	20.0	13.0	3000	40 000	4.2	0.9 ± 0.3	3	VDRH20R011ByE	586 x110y
14	18	22	48	1.0	0.8	250	1300	3.4	0.7 ± 0.3	4	VDRH05B014xyE	582 x140y
			43	2.5	1.7	500	2800	3.4	0.7 ± 0.3	4	VDRH07D014xyE	583 x140y
			43	5.0	3.2	1000	6000	3.8	0.9 ± 0.3	4	VDRH10G014xyE	584 x140y
			43	10.0	6.3	2000	15 000	3.8	0.9 ± 0.3	4	VDRH14M014xyE	585 x140y
			43	20.0	16.0	3000	30 000	4.2	1.1 ± 0.3	3	VDRH20R014ByE	586 x140y
17	22	27	60	1.0	1.1	250	1050	3.7	0.8 ± 0.3	4	VDRH05B017xyE	582 x170y
			53	2.5	2.1	500	2000	3.7	0.8 ± 0.3	4	VDRH07D017xyE	583 x170y
			53	5.0	3.9	1000	4000	4.1	1.0 ± 0.3	4	VDRH10G017xyE	584 x170y
			53	10.0	7.8	2000	10 000	4.1	1.0 ± 0.3	4	VDRH14M017xyE	585 x170y
			53	20.0	19.0	3000	20 000	4.5	1.2 ± 0.3	3	VDRH20R017ByE	586 x170y
20	26	33	73	1.0	1.3	250	900	3.9	1.0 ± 0.3	4	VDRH05B020xyE	582 x200y
			65	2.5	2.8	500	1500	3.9	1.0 ± 0.3	4	VDRH07D020xyE	583 x200y
			65	5.0	4.8	1000	3000	4.3	1.2 ± 0.3	4	VDRH10G020xyE	584 x200y
			65	10.0	9.5	2000	7500	4.3	1.2 ± 0.3	4	VDRH14M020xyE	585 x200y
			65	20.0	24.0	3000	15 000	4.7	1.4 ± 0.3	3	VDRH20R020ByE	586 x200y
25	31	39	86	1.0	1.5	250	500	4.2	1.2 ± 0.3	4	VDRH05B025xyE	582 x250y
			77	2.5	3.0	500	1350	4.2	1.2 ± 0.3	4	VDRH07D025xyE	583 x250y
			77	5.0	5.6	1000	2600	4.6	1.4 ± 0.3	4	VDRH10G025xyE	584 x250y
			77	10.0	11.0	2000	6500	4.6	1.4 ± 0.3	4	VDRH14M025xyE	585 x250y
			77	20.0	28.0	3000	13 000	5.0	1.6 ± 0.3	3	VDRH20R025ByE	586 x250y
30	38	47	104	1.0	1.8	250	700	4.4	1.4 ± 0.5	4	VDRH05B030xyE	582 x300y
			93	2.5	3.8	500	1600	4.4	1.4 ± 0.5	4	VDRH07D030xyE	583 x300y
			93	5.0	6.8	1000	2700	4.8	1.6 ± 0.5	4	VDRH10G030xyE	584 x300y
			93	10.0	14.0	2000	6000	4.8	1.6 ± 0.5	4	VDRH14M030xyE	585 x300y
			93	20.0	34.0	3000	12 000	5.2	1.8 ± 0.5	3	VDRH20R030ByE	586 x300y
35	45	56	123	1.0	2.2	250	560	4.8	1.7 ± 0.5	4	VDRH05B035xyE	582 x350y
			110	2.5	4.4	500	1300	4.8	1.7 ± 0.5	4	VDRH07D035xyE	583 x350y
			110	5.0	8.1	1000	2200	5.2	1.9 ± 0.5	4	VDRH10G035xyE	584 x350y
			110	10.0	16.0	2000	4800	5.2	1.9 ± 0.5	4	VDRH14M035xyE	585 x350y
			110	20.0	41.0	3000	9600	5.6	2.1 ± 0.5	3	VDRH20R035ByE	586 x350y
40	56	68	150	1.0	2.6	250	460	5.1	2.1 ± 0.5	4	VDRH05B040xyE	582 x400y
			135	2.5	5.4	500	1000	5.1	2.1 ± 0.5	4	VDRH07D040xyE	583 x400y
			135	5.0	9.8	1000	1800	5.5	2.3 ± 0.5	4	VDRH10G040xyE	584 x400y
			135	10.0	20.0	2000	3800	5.5	2.3 ± 0.5	4	VDRH14M040xyE	585 x400y
			135	20.0	49.0	3000	7600	5.9	2.5 ± 0.5	3	VDRH20R040ByE	586 x400y
50	65	82	145	5.0	3.5	800	370	3.5	0.6 ± 0.3	4	VDRH05E050xyE	582 x500y
			135	10.0	7.0	1750	900	3.5	0.6 ± 0.3	4	VDRH07K050xyE	583 x500y
			135	25.0	14.0	3500	1500	3.9	0.8 ± 0.3	3	VDRH10S050xyE	584 x500y
			135	50.0	28.0	6000	3100	3.9	0.8 ± 0.3	2	VDRH14V050xyE	585 x500y

Downloaded from Elcodis.com electronic components distributor

ELECTRICAL DATA AND ORDERING INFORMATION

MAXIMUM CONTINUOUS VOLTAGE		VOLTAGE (3) at 1 mA	MAXIMUM VOLTAGE at STATED CURRENT		MAXIMUM ENERGY (4) (10 x 1000 µs)	MAXIMUM NON-REP. TRANSIENT CURRENT (5) I_{NRP} (8 x 20 µs)	TYPICAL CAPACITANCE at 1 kHz	T (max.)	E	UL 1449 ED3 SPD TYPE (8)	CATALOG NUMBERS (1)	
RMS (2) (V)	DC (V)	(V)	V (V)	I (A)	(J)	(A)	(pF)	(mm)	(mm)		SAP (7)	12NC (6) 2381-
60	85	100	175	5.0	4.5	800	290	3.7	0.7 ± 0.3	4	VDRH05E060xyE	582 x600y
			165	10.0	9.0	1750	700	3.7	0.7 ± 0.3	4	VDRH07K060xyE	583 x600y
			165	25.0	18.0	3500	1200	4.1	0.9 ± 0.3	4	VDRH10S060xyE	584 x600y
			165	50.0	36.0	6000	2300	4.1	0.9 ± 0.3	2	VDRH14V060xyE	585 x600y
			165	100.0	72.0	10 000	4600	4.5	1.1 ± 0.3	2	VDRH20X060ByE	586 x600y
75	100	120	210	5.0	5.5	800	240	4.0	0.9 ± 0.3	4	VDRH05E075xyE	582 x750y
			200	10.0	11.0	1750	530	4.0	0.9 ± 0.3	4	VDRH07K075xyE	583 x750y
			200	25.0	22.0	3500	1000	4.4	1.1 ± 0.3	4	VDRH10S075xyE	584 x750y
			200	50.0	44.0	6000	1900	4.4	1.1 ± 0.3	2	VDRH14V075xyE	585 x750y
			200	100.0	88.0	10 000	3800	4.8	1.3 ± 0.3	2	VDRH20X075ByE	586 x750y
95	125	150	260	5.0	6.5	800	180	4.2	1.1 ± 0.3	4	VDRH05E095xyE	582 x950y
			250	10.0	13.0	1750	450	4.2	1.1 ± 0.3	4	VDRH07K095xyE	583 x950y
			250	25.0	25.0	3500	800	4.6	1.3 ± 0.3	4	VDRH10S095xyE	584 x950y
			250	50.0	53.0	6000	1500	4.6	1.3 ± 0.3	2	VDRH14V095xyE	585 x950y
			250	100.0	106.0	10 000	3000	5.0	1.5 ± 0.3	2	VDRH20X095ByE	586 x950y
115	150	180	320	5.0	8.0	800	150	3.6	0.9 ± 0.3	4	VDRH05E115xyE	582 x111y
			300	10.0	16.0	1750	390	3.6	0.9 ± 0.3	4	VDRH07K115xyE	583 x111y
			300	25.0	32.0	3500	680	4.0	1.1 ± 0.3	3	VDRH10S115xyE	584 x111y
			300	50.0	65.0	6000	1320	4.0	1.1 ± 0.3	2	VDRH14V115xyE	585 x111y
			300	100.0	130.0	10 000	2640	4.4	1.3 ± 0.3	2	VDRH20X115ByE	586 x111y
130	170	205	355	5.0	8.5	800	130	3.8	1.0 ± 0.3	4	VDRH05E130xyE	582 x131y
			340	10.0	17.5	1750	320	3.8	1.0 ± 0.3	4	VDRH07K130xyE	583 x131y
			340	25.0	35.0	3500	580	4.3	1.2 ± 0.3	3	VDRH10S130xyE	584 x131y
			340	50.0	70.0	6000	1050	4.3	1.2 ± 0.3	2	VDRH14V130xyE	585 x131y
			340	100.0	140.0	10 000	2100	4.8	1.4 ± 0.3	2	VDRH20X130ByE	586 x131y
140	180	220	380	5.0	9.0	800	120	3.9	1.0 ± 0.3	4	VDRH05E140xyE	582 x141y
			360	10.0	19.0	1750	290	3.9	1.0 ± 0.3	4	VDRH07K140xyE	583 x141y
			360	25.0	39.0	3500	540	4.3	1.2 ± 0.3	3	VDRH10S140xyE	584 x141y
			360	50.0	78.0	6000	950	4.3	1.2 ± 0.3	2	VDRH14V140xyE	585 x141y
			360	100.0	155.0	10 000	1900	4.8	1.5 ± 0.3	2	VDRH20X140ByE	586 x141y
150	200	240	415	5.0	10.5	800	110	4.1	1.1 ± 0.3	4	VDRH05E150xyE	582 x151y
			395	10.0	21.0	1750	270	4.1	1.1 ± 0.3	4	VDRH07K150xyE	583 x151y
			395	25.0	42.0	3500	490	4.3	1.3 ± 0.3	3	VDRH10S150xyE	584 x151y
			395	50.0	84.0	6000	850	4.3	1.3 ± 0.3	2	VDRH14V150xyE	585 x151y
			395	100.0	168.0	10 000	1700	4.8	1.5 ± 0.3	2	VDRH20X150ByE	586 x151y
175	225	275	475	5.0	11.0	800	90	4.1	1.3 ± 0.3	4	VDRH05E175xyE	582 x171y
			455	10.0	24.0	1750	230	4.1	1.3 ± 0.3	4	VDRH07K175xyE	583 x171y
			455	25.0	49.0	3500	430	4.5	1.5 ± 0.3	3	VDRH10S175xyE	584 x171y
			455	50.0	99.0	6000	750	4.5	1.5 ± 0.3	2	VDRH14V175xyE	585 x171y
			455	100.0	190.0	10 000	1500	4.9	1.7 ± 0.3	2	VDRH20X175ByE	586 x171y
195	250	300	525	5.0	12.0	800	80	4.3	1.4 ± 0.8	4	VDRH05E195xyE	582 x191y
			455	10.0	26.0	1750	210	4.3	1.4 ± 0.8	4	VDRH07K195xyE	583 x191y
			455	25.0	52.0	3500	380	4.8	1.6 ± 0.8	4	VDRH10S195xyE	584 x191y
			455	50.0	105.0	6000	690	4.8	1.6 ± 0.8	2	VDRH14V195xyE	585 x191y
			455	100.0	210.0	10 000	1350	5.1	1.9 ± 0.8	2	VDRH20X195ByE	586 x191y

Downloaded from Elcodis.com electronic components distributor

ELECTRICAL DATA AND ORDERING INFORMATION

MAXIMUM CONTINUOUS VOLTAGE		VOLTAGE (3) at 1 mA	MAXIMUM VOLTAGE at STATED CURRENT		MAXIMUM ENERGY (4) (10 x 1000 µs)	MAXIMUM NON-REP. TRANSIENT CURRENT (5) I_{NRP} (8 x 20 µs)	TYPICAL CAPACITANCE at 1 kHz	T (max.)	E	UL 1449 ED3 SPD TYPE (8)	CATALOG NUMBERS (1)	
RMS (2) (V)	DC (V)	(V)	V (V)	I (A)	(J)	(A)	(pF)	(mm)	(mm)		SAP (7)	12NC (6) 2381-
210	275	330	575	5.0	13.0	800	75	4.4	1.6 ± 0.8	4	VDRH05E210xyE	582 x211y
			505	10.0	28.0	1750	190	4.4	1.6 ± 0.8	4	VDRH07K210xyE	583 x211y
			505	25.0	58.0	3500	350	4.8	1.8 ± 0.8	4	VDRH10S210xyE	584 x211y
			505	50.0	115.0	6000	610	4.8	1.8 ± 0.8	2	VDRH14V210xyE	585 x211y
			505	100.0	228.0	10 000	1250	5.3	2.0 ± 0.8	2	VDRH20X210ByE	586 x211y
230	300	360	620	5.0	16.0	800	70	4.6	1.7 ± 0.8	4	VDRH05E230xyE	582 x231y
			595	10.0	32.0	1750	170	4.6	1.7 ± 0.8	4	VDRH07K230xyE	583 x231y
			595	25.0	65.0	3500	320	5.1	1.9 ± 0.8	4	VDRH10S230xyE	584 x231y
			595	50.0	130.0	6000	540	5.1	1.9 ± 0.8	2	VDRH14V230xyE	585 x231y
			595	100.0	255.0	10 000	1100	5.4	2.2 ± 0.8	2	VDRH20X230ByE	586 x231y
250	320	390	675	5.0	17.0	800	60	4.8	1.9 ± 0.8	4	VDRH05E250xyE	582 x251y
			650	10.0	35.0	1750	160	4.8	1.9 ± 0.8	4	VDRH07K250xyE	583 x251y
			650	25.0	70.0	3500	300	5.1	2.1 ± 0.8	4	VDRH10S250xyE	584 x251y
			650	50.0	140.0	6000	480	5.1	2.1 ± 0.8	2	VDRH14V250xyE	585 x251y
			650	100.0	275.0	10 000	960	5.5	2.3 ± 0.8	2	VDRH20X250ByE	586 x251y
275	350	430	745	5.0	20.0	800	55	4.9	2.0 ± 0.8	4	VDRH05E275xyE	582 x271y
			710	10.0	40.0	1750	140	4.9	2.0 ± 0.8	4	VDRH07K275xyE	583 x271y
			710	25.0	80.0	3500	270	5.3	2.2 ± 0.8	4	VDRH10S275xyE	584 x271y
			710	50.0	155.0	6000	440	5.3	2.2 ± 0.8	2	VDRH14V275xyE	585 x271y
			710	100.0	303.0	10 000	900	5.8	2.5 ± 0.8	2	VDRH20X275ByE	586 x271y
300	385	470	810	5.0	21.0	800	50	5.1	2.2 ± 0.8	4	VDRH05E300xyE	582 x301y
			775	10.0	42.0	1750	130	5.1	2.2 ± 0.8	4	VDRH07K300xyE	583 x301y
			775	25.0	85.0	3500	240	5.5	2.4 ± 0.8	4	VDRH10S300xyE	584 x301y
			775	50.0	175.0	6000	400	5.5	2.4 ± 0.8	2	VDRH14V300xyE	585 x301y
			775	100.0	350.0	10 000	810	5.9	2.7 ± 0.8	2	VDRH20X300ByE	586 x301y
320	420	510	880	5.0	22.0	800	45	5.5	2.4 ± 0.8	4	VDRH05E320xyE	582 x321y
			842	10.0	45.0	1750	120	5.5	2.4 ± 0.8	4	VDRH07K320xyE	583 x321y
			842	25.0	92.0	3500	220	6.0	2.6 ± 0.8	4	VDRH10S320xyE	584 x321y
			842	50.0	190.0	6000	370	6.0	2.6 ± 0.8	2	VDRH14V320xyE	585 x321y
			842	100.0	382.0	10 000	750	6.3	2.9 ± 0.8	2	VDRH20X320ByE	586 x321y
350	460	560	940	5.0	25.0	800	42	5.8	2.7 ± 0.8	4	VDRH05E350xyE	582 x351y
			920	10.0	51.0	1750	110	5.8	2.7 ± 0.8	4	VDRH07K350xyE	583 x351y
			920	25.0	102.0	3500	200	6.1	2.9 ± 0.8	4	VDRH10S350xyE	584 x351y
			920	50.0	205.0	6000	320	6.1	2.9 ± 0.8	2	VDRH14V350xyE	585 x351y
			920	100.0	410.0	10 000	650	6.5	3.2 ± 0.8	2	VDRH20X350ByE	586 x351y
385	505	620	1050	5.0	27.0	800	40	6.0	3.0 ± 0.8	4	VDRH05E385xyE	582 x381y
			1025	10.0	54.0	1750	95	6.0	3.0 ± 0.8	4	VDRH07K385xyE	583 x381y
			1025	25.0	107.0	3500	180	6.5	3.2 ± 0.8	3	VDRH10S385xyE	584 x381y
			1025	50.0	215.0	6000	280	6.5	3.2 ± 0.8	2	VDRH14V385xyE	585 x381y
			1025	100.0	420.0	10 000	570	6.8	3.5 ± 0.8	2	VDRH20X385ByE	586 x381y
420	560	680	1150	5.0	28.0	800	35	6.3	3.2 ± 0.8	4	VDRH05E420xyE	582 x421y
			1120	10.0	56.0	1750	85	6.3	3.2 ± 0.8	4	VDRH07K420xyE	583 x421y
			1120	25.0	112.0	3500	165	6.7	3.4 ± 0.8	3	VDRH10S420xyE	584 x421y
			1120	50.0	225.0	6000	250	6.7	3.4 ± 0.8	2	VDRH14V420xyE	585 x421y
			1120	100.0	430.0	10 000	510	7.1	3.7 ± 0.8	2	VDRH20X420ByE	586 x421y

Downloaded from Elcodis.com electronic components distributor

ELECTRICAL DATA AND ORDERING INFORMATION

MAXIMUM CONTINUOUS VOLTAGE		VOLTAGE (3) at 1 mA	MAXIMUM VOLTAGE at STATED CURRENT		MAXIMUM ENERGY (4) (10 x 1000 µs)	MAXIMUM NON-REP. TRANSIENT CURRENT (5) I_{NRP} (8 x 20 µs)	TYPICAL CAPACITANCE at 1 kHz	T (max.)	E	UL 1449 ED3 SPD TYPE (8)	CATALOG NUMBERS (1)	
RMS (2) (V)	DC (V)	(V)	V (V)	I (A)	(J)	(A)	(pF)	(mm)	(mm)		SAP (7)	12NC (6) 2381-
460	615	750	1290	5.0	29.0	800	30	6.6	3.6 ± 0.8	4	VDRH05E460xyE	582 x461y
			1240	10.0	58.0	1750	75	6.6	3.6 ± 0.8	4	VDRH07K460xyE	583 x461y
			1240	25.0	115.0	3500	150	7.0	3.8 ± 0.8	3	VDRH10S460xyE	584 x461y
			1240	50.0	230.0	6000	225	7.0	3.8 ± 0.8	2	VDRH14V460xyE	585 x461y
			1240	100.0	440.0	10 000	450	7.5	4.1 ± 0.8	2	VDRH20X460ByE	586 x461y
485	640	780	1290	10.0	59.0	1750	65	6.8	3.7 ± 0.8	4	VDRH07K485xyE	583 x481y
			1290	25.0	116.0	3500	145	7.3	3.9 ± 0.8	3	VDRH10S485xyE	584 x481y
			1290	50.0	233.0	6000	220	7.3	3.9 ± 0.8	2	VDRH14V485xyE	585 x481y
			1290	100.0	450.0	10 000	400	7.6	4.2 ± 0.8	2	VDRH20X485ByE	586 x481y
510	670	820	1355	10.0	60.0	1750	62	7.0	3.9 ± 0.8	4	VDRH07K510xyE	583 x511y
			1355	25.0	118.0	3500	135	7.5	4.1 ± 0.8	3	VDRH10S510xyE	584 x511y
			1355	50.0	235.0	6000	220	7.5	4.1 ± 0.8	2	VDRH14V510xyE	585 x511y
			1355	100.0	460.0	10 000	400	7.9	4.4 ± 0.8	2	VDRH20X510ByE	586 x511y
550	745	910	1500	25.0	127.0	3500	120	7.9	4.5 ± 0.8	3	VDRH10S550xyE	584 x551y
			1500	50.0	255.0	6000	180	7.9	4.5 ± 0.8	3	VDRH14V550xyE	585 x551y
			1500	100.0	510.0	10 000	320	8.3	4.9 ± 0.8	2	VDRH20X550ByE	586 x551y
625	825	1000	1650	25.0	140.0	3500	105	8.4	5.0 ± 0.8	3	VDRH10S625ByE	584 x6216
			1650	50.0	283.0	6000	165	8.4	5.0 ± 0.8	3	VDRH14V625ByE	585 x6216
			1650	100.0	566.0	10 000	280	8.8	5.3 ± 0.8	2	VDRH20X625ByE	586 x6216
680	895	1100	1815	25.0	155.0	3500	80	9.8	5.4 ± 0.8	3	VDRH10S680ByE	584 x6816
			1815	50.0	310.0	6000	150	9.8	5.4 ± 0.8	3	VDRH14V680ByE	585 x6816
			1815	100.0	620.0	10 000	250	10.2	5.8 ± 0.8	2	VDRH20X680ByE	586 x6816

Notes

(1) The products are certified according to (c)UL (E332800), VDE (40013495) and CSA (219883)

(2) The sinusoidal voltage is assumed as the normal operating condition. If a non-sinusoidal voltage is present, type selection should be based on multiplying the peak voltage by a factor of 0.707.

(3) The voltage measured at 1 mA meets the requirements of IEC 61051.
The tolerance on the voltage at 1 mA is ± 10 %.

(4) High energy surges are generally of longer duration. The maximum energy for one pulse of 10 x 1000 µs is given as a reference for longer duration pulses. This pulse can be characterised by peak current (I_p) and pulse width t_2 (virtual time of half I_p value, following *"IEC 60060-2, section 6"*). If V_p is the clamping voltage corresponding to I_p, the energy absorbed in the varistor is determined by the formula:
$E = K \times V_p \times I_p \times t_2$
where:
a) K is dependant on the value of t2 when the value of t1 is between 8 µs and 10 µs; see Peak Current as a Function of Pulse Width drawing.

(5) A current wave of 8 x 20 µs is used as a standard for pulse current and clamping voltage ratings. The maximum non-repetitive transient current is given for one pulse applied during the life of the component.

(6) For composition of the 12NC part number replace "x" and "y" by figures from the sections "Varistors in Bulk", "Varistors on Tape in Ammopack" and "Varistors on "Tape on Reel"

(7) For composition of the SAP part number:

Replace "x" by
- B for bulk type
- T for tape and reel
- A for tape and ammopack

Replace "y" by
- S for straight leads
- K for kinked leads (bulk only)
- L for kinked leads with H_0 = 16 mm (tape and reel/ammo)
- M for kinked leads with H_0 = 18.25 mm (tape and reel/ammo)

(8) All varistors are recognized under VZAC2 surge protective devices, components type 4 as specified in UL 1449 edition 3. The parts with indication type 2 or 3 SPD's, are tested and certified to be used in type 2 or 3 SPD applications. The final acceptance of the component is dependent upon its installation and use in complete equipment submitted to underwriters laboratories Inc.

Downloaded from Elcodis.com electronic components distributor

ELECTRICAL CHARACTERISTICS

ELECTRICAL DATA		
PARAMETER	**VALUE**	**UNIT**
Maximum continuous voltage:		
RMS	11 to 680	V
DC	14 to 895	V
Maximum non-repetitive transient current (I_{NRP}) (8 x 20 µs):		
VDRH05.....E/2381 582	250 or 800	A
VDRH07.....E/2381 583	500 or 1750	A
VDRH10.....E/2381 584	1000 or 3500	A
VDRH14.....E/2381 585	2000 or 6000	A
VDRH20.....E/2381 586	3000 or 10 000	A
Thermal resistance:		
VDRH05.....E/2381 582	≈ 80	K/W
VDRH07.....E/2381 583	≈ 70	K/W
VDRH10.....E/2381 584	≈ 60	K/W
VDRH14.....E/2381 585	≈ 50	K/W
VDRH20.....E/2381 586	≈ 40	K/W
Maximum dissipation:		
VDRH05.....E/2381 582	100	mW
VDRH07.....E/2381 583	250	mW
VDRH10.....E/2381 584	400	mW
VDRH14.....E/2381 585	600	mW
VDRH20.....E/2381 586	1000	mW
Temperature coefficient of voltage at 1 mA maximum	± 0.05	%/K
Voltage proof between interconnected leads and case	2500	V
Storage temperature	- 40 to + 150	°C
Operating temperature	- 40 to + 125	°C

DERATING CURVE

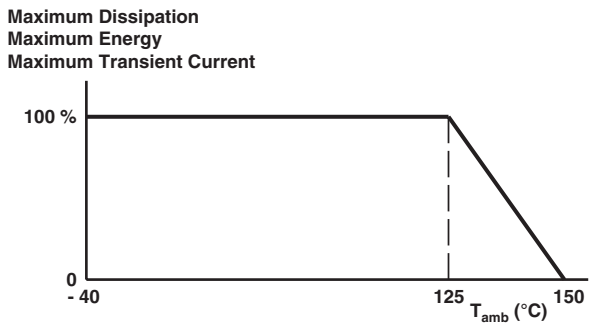

PEAK CURRENT AS A FUNCTION OF PULSE WIDTH

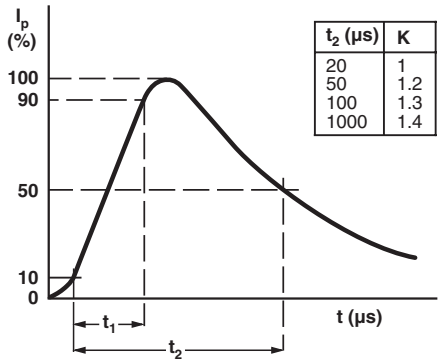

COMPONENT DIMENSIONS (BULK TYPE) in millimeters AND CATALOG NUMBERS								
D MAX.	A MAX.	A_0 MAX.	L MIN.	T (1) MAX.	E (1)	d	F	CATALOG NUMBER
7.0	9.0	11.0	24.0	6.5	0.7 to 3.6	0.6 ± 0.05	5 ± 1.0	VDRH05.....E/2381 582 ....
9.0	11.0	13.0	24.0	6.5	0.7 to 3.6	0.6 ± 0.05	5 ± 1.0	VDRH07.....E/2381 583 ....
13.5	15.5	18.0	17.0	8	0.9 to 4.5	0.8 ± 0.05	7.5 ± 1.0	VDRH10.....E/2381 584 ....
17.0	19.0	23.0	16.0	8	0.9 to 4.5	0.8 ± 0.05	7.5 ± 1.0	VDRH14.....E/2381 585 ....
23.0	25.0	28.0	24.0	10	1.1 to 5.8	1.0 ± 0.05	10 ± 1.0	VDRH20.....E/2381 586 ....

Note
(1) $T_{max.}$ and E values per size and voltage level can be found back in the Electrical Data table

Downloaded from Elcodis.com electronic components distributor

VARISTORS IN BULK					
TYPE	**VDRH05.... 2381 582 ... Ø 5 mm 11 V to 460 V**	**VDRH07.... 2381 583 ... Ø 7 mm 11 V to 510 V**	**VDRH10.... 2381 584 ... Ø 10 mm 11 V to 680 V**	**VDRH14.... 2381 585 ... Ø 14 mm 11 V to 680 V**	**VDRH20.... 2381 586 ... Ø 20 mm 11 V to 680 V**
Straight leads; see outline of components with straight leads drawing	BSE 5...6	BSE 5...6	BSE 5...6	BSE 5...6	BSE 5...6
Kinked leads; see outline of components with kinked leads drawing	BKE 6...6	BKE 6...6	BKE 6...6	BKE 6...6	BKE 6...6
Packaging quantities					
14 V to 95 V	250	250	250	100	50
130 V to 385 V	250	250	250	100	50
420 V to 460 V	250	250	200	100	50
485 V to max. V	-	250	150	100	50

DIMENSIONS in millimeters: See Component Dimensions and Electrical Data table

OUTLINE of Component with Straight Leads

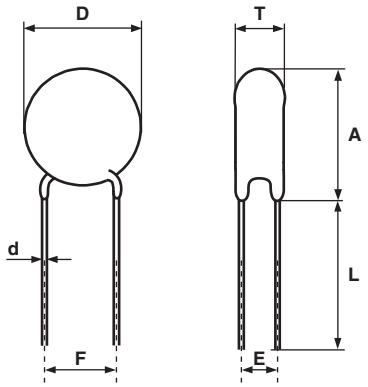

OUTLINE of Component with Kinked Leads

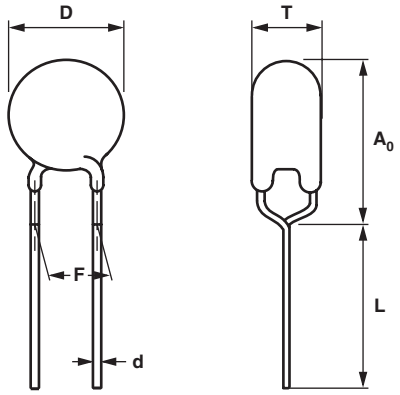

Downloaded from Elcodis.com electronic components distributor

VARISTORS ON TAPE IN AMMOPACK				
TYPE	**VDRH05.... 2381 582 ... Ø 5 mm 11 V to 460 V**	**VDRH07.... 2381 583 ... Ø 7 mm 11 V to 510 V**	**VDRH10.... 2381 584 ... Ø 10 mm 11 V to 550 V**	**VDRH14.... 2381 585 ... Ø 14 mm 11 V to 550 V**
Straight leads H = 18 mm H = 20 mm See drawing: Taped version with straight leads	- ASE 0...7	- ASE 0...7	ASE 0...7 -	ASE 0...7 -
Kinked leads H_0 = 18.25 mm H_0 = 16 mm See drawing: Taped version with kinked leads	AME 3...7 ALE 8...7	AME 3...7 ALE 8...7	AME 3...7 ALE 8...7	AME 3...7 ALE 8...7
Packaging quantities				
14 V to 210 V	1500 (1)	1500 (1)	500	500
230 V to max. V	1000	1000	500	500

Note

(1) Except for 35 V and 40 V = 1000 pieces

DIMENSIONS OF AMMOPACK in millimeters

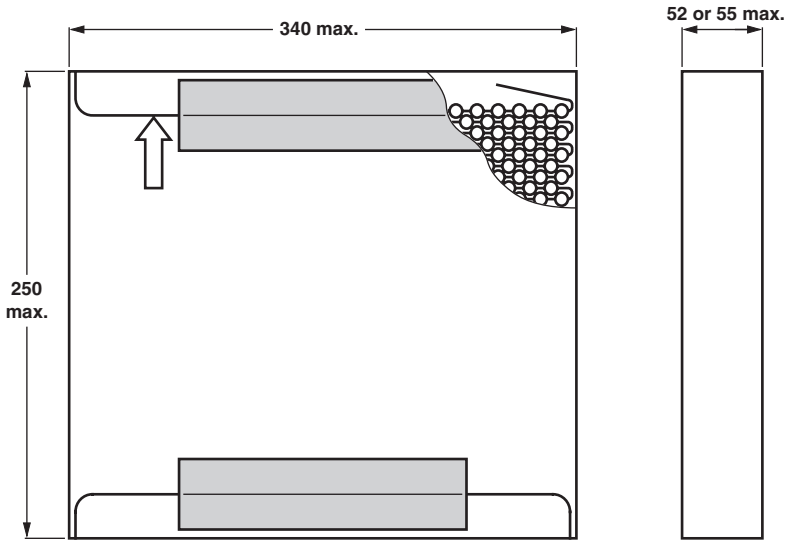

Downloaded from Elcodis.com electronic components distributor

VARISTORS ON TAPE AND REEL				
TYPE	**VDRH05.... 2381 582 ... Ø 5 mm 11 V to 460 V**	**VDRH07.... 2381 583 ... Ø 7 mm 11 V to 510 V**	**VDRH10.... 2381 584 ... Ø 10 mm 11 V to 550 V**	**VDRH14.... 2381 585 ... Ø 14 mm 11 V to 550 V**
Straight leads H = 18 mm H = 20 mm See drawing: Taped version with straight leads	- TSE 0...6	- TSE 0...6	TSE 0...6 -	TSE 0...6 -
Kinked leads H_0 = 18.25 mm H_0 = 16 mm See drawing: Taped version with kinked leads	TME 3...6 TLE 8...6	TME 3...6 TLE 8...6	TME 3...6 TLE 8...6	TME 3...6 TLE 8...6
Packaging quantities				
14 V to 250 V	1500	1500	1000	750
275 V to 300 V	1500	1500	750	750
320 V to 350 V	1000	1000	500	500
385 V to max. V	1000	1000	500	500

PACKAGING

TAPED VERSION WITH STRAIGHT LEADS (only for VDRH05.....E/2381 582 .... and VDRH07.....E/2381 583 ....)

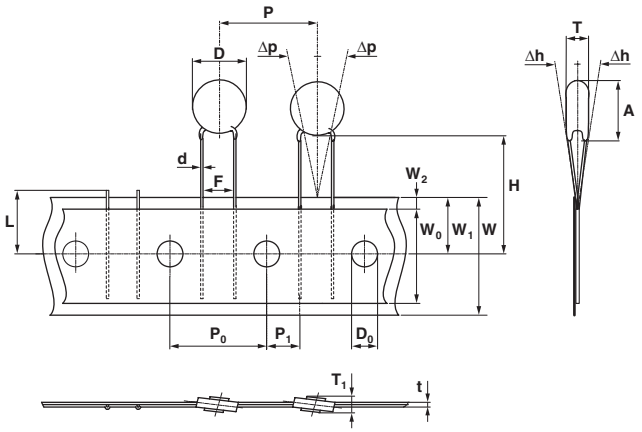

TAPED VERSION WITH STRAIGHT LEADS (only for VDRH10.....E/2381 584 .... and VDRH14.....E/2381 585 ....)

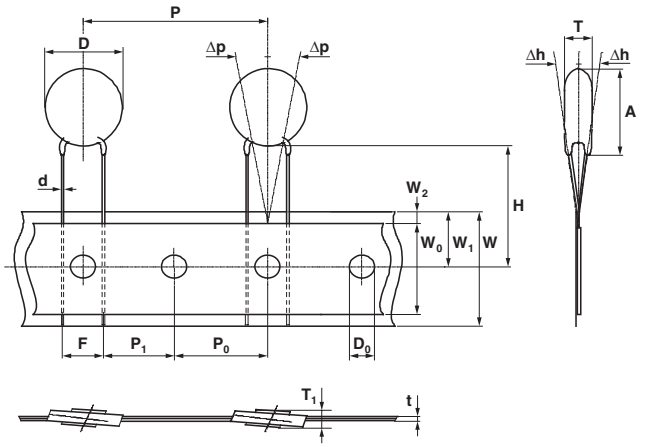

Downloaded from Elcodis.com electronic components distributor

TAPED VERSION WITH KINKED LEADS
(only for VDRH05.....E/2381 582 .... and VDRH07.....E/2381 583 ....)

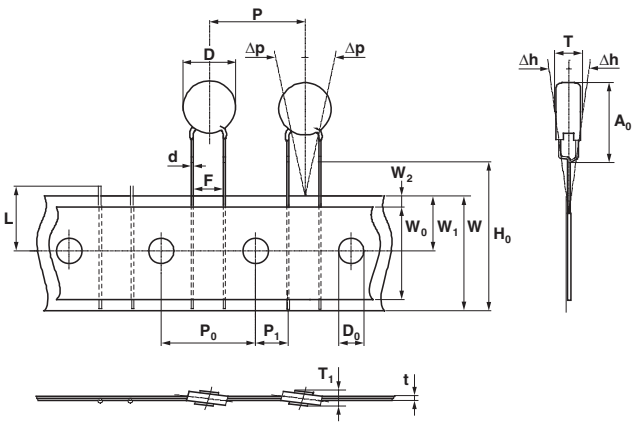

TAPED VERSION WITH KINKED LEADS
(only for VDRH10.....E/2381 584 .... and VDRH14.....E/2381 585 ....)

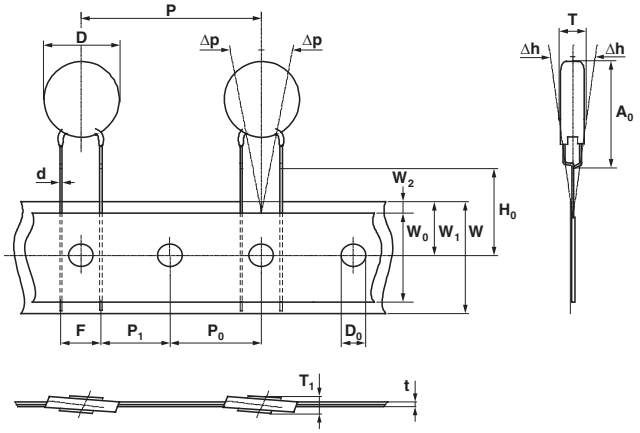

TAPING DATA (based on IEC 60286-2)					
SYMBOL	**PARAMETER**	**DIMENSIONS/TOLERANCE**			
		VDRH05 582	**VDRH07 583**	**VDRH10 584**	**VDRH14 585**
A	Mounting height	9.0 max.	11.0 max.	15.5 max.	19.0 max.
A_o	Mounting height	11.0 max.	13.0 max.	18.0 max.	23.0 max.
D	Body diameter	7.0 max.	9.0 max.	13.5 max.	17.0 max.
d	Lead wire diameter	0.6 ± 0.05		0.8 ± 0.05	
F	Lead to lead distance (1)	5.0 + 0.8/- 0.2		7.5 ± 0.8	
H	Distance component to tape center (2)	20.0 + 2.0/- 0.0		18.0 + 2.0/- 0.0	
H_0	Lead-wire clinch height	16.0 or 18.25 ± 0.5			
P	Pitch of components on tape	12.7 ± 1.0		25.4 ± 1.0	
T	Total thickness	See Electrical Data table			

Notes
(1) Guaranteed between component and tape
(2) For 2381 585 0511y and 2381 585 0551y: H = 20 mm ± 1 mm

Downloaded from Elcodis.com electronic components distributor

V/I CHARACTERISTICS

11 V_{RMS} to 40 V_{RMS}; VDRH05.....E/2381 582 ....

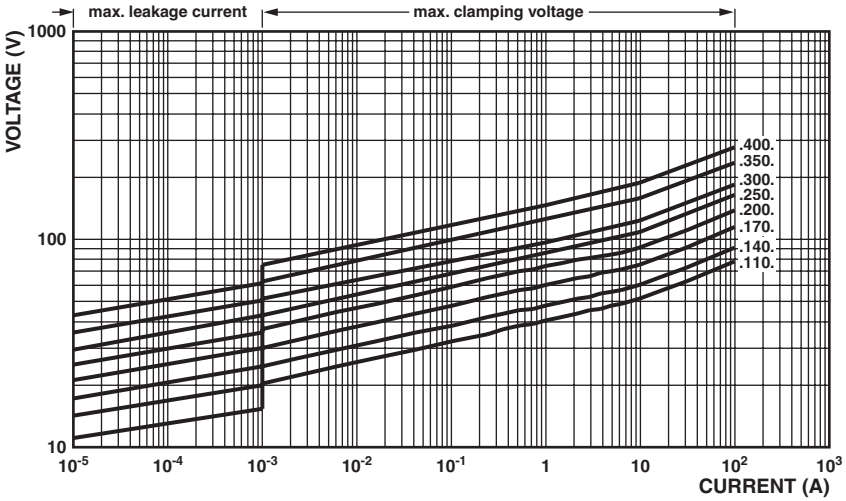

50 V_{RMS} to 460 V_{RMS}; VDRH05.....E/2381 582 ....

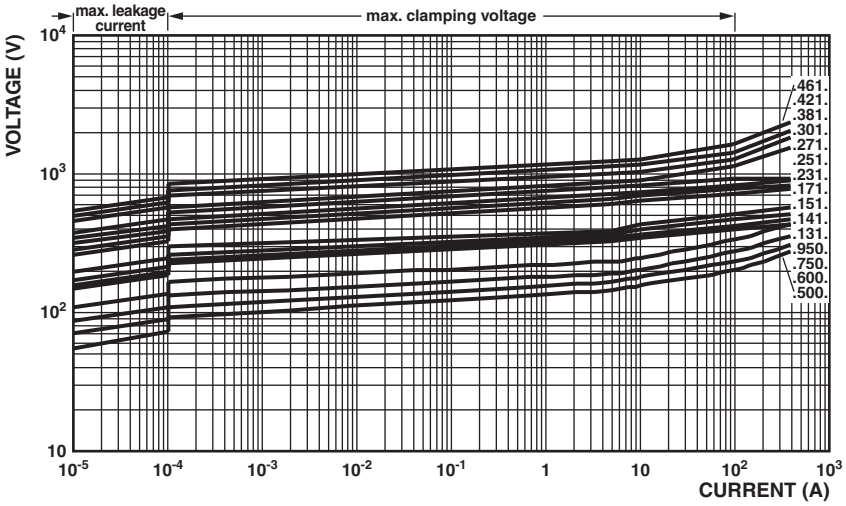

11 V_{RMS} to 40 V_{RMS}; VDRH07.....E/2381 583 ....

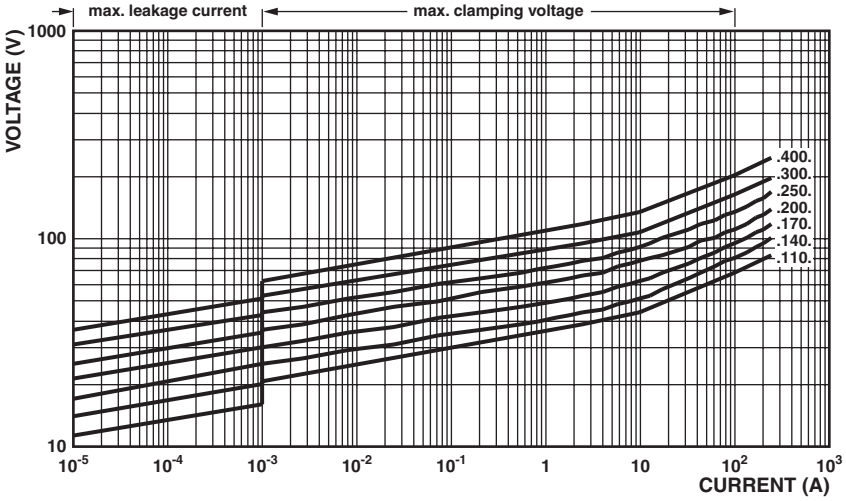

Downloaded from Elcodis.com electronic components distributor

50 V_{RMS} to 510 V_{RMS}; VDRH07.....E/2381 583 ....

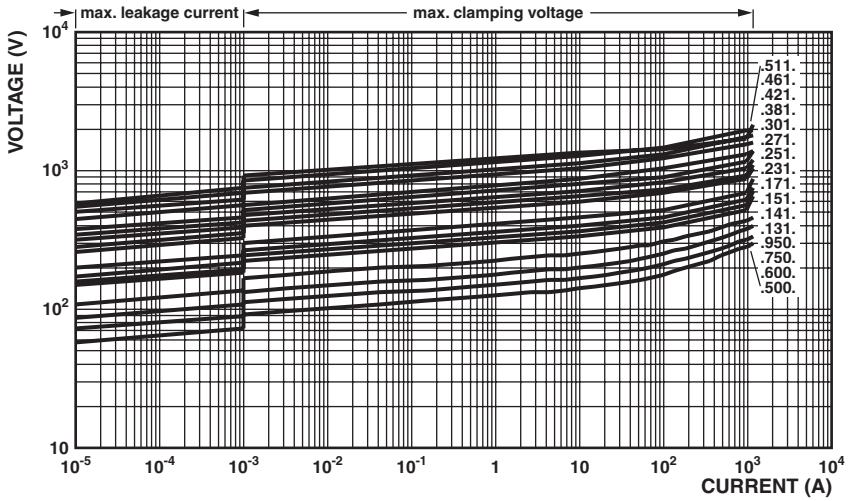

11 V_{RMS} to 40 V_{RMS}; VDRH10.....E/2381 584 ....

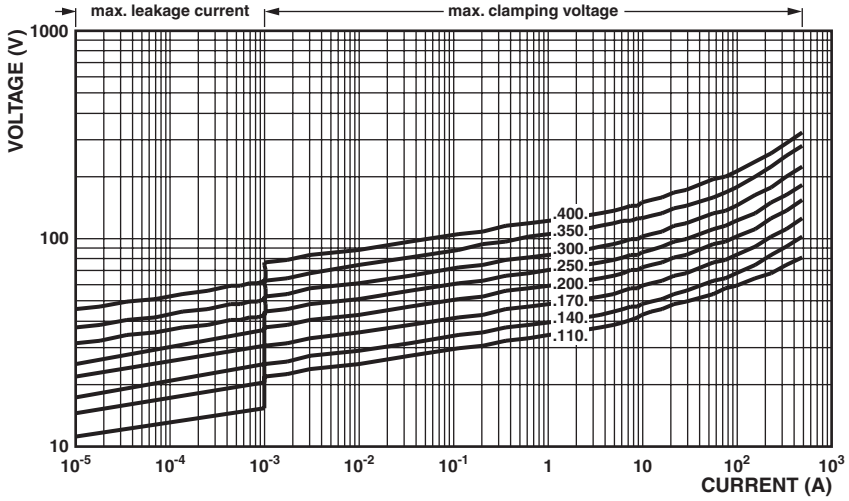

50 V_{RMS} to 300 V_{RMS}; VDRH10.....E/2381 584 ....

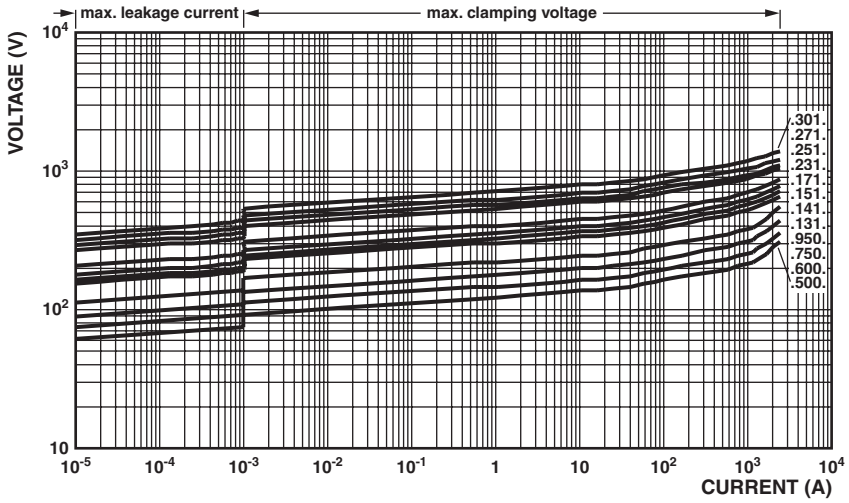

Downloaded from Elcodis.com electronic components distributor

320 V_{RMS} to 680 V_{RMS}; VDRH10.....E/2381 584 ....

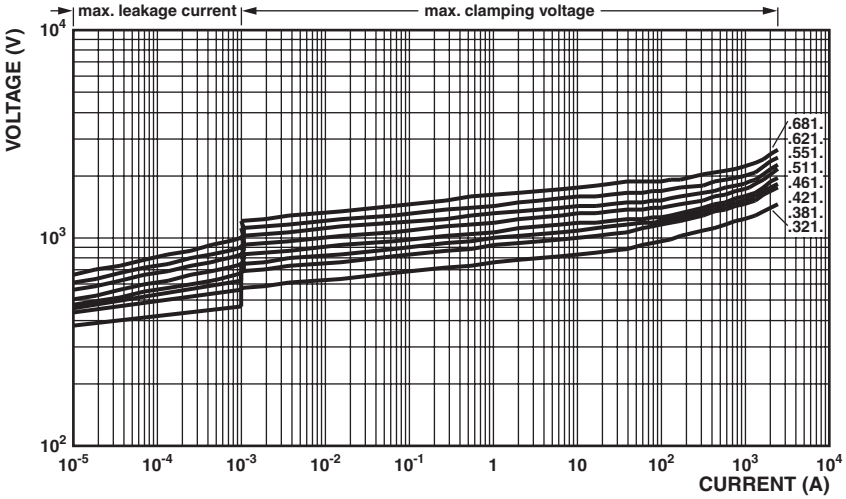

11 V_{RMS} to 40 V_{RMS}; VDRH14.....E/2381 585 ....

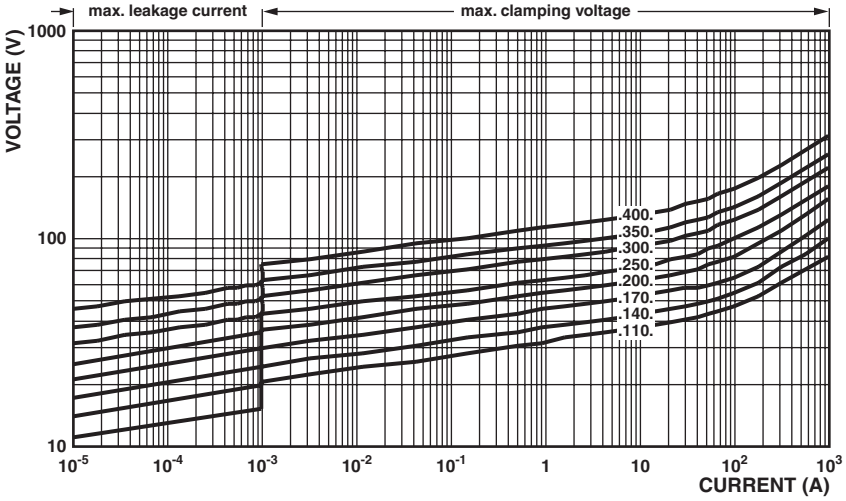

50 V_{RMS} to 300 V_{RMS}; VDRH14.....E/2381 585 ....

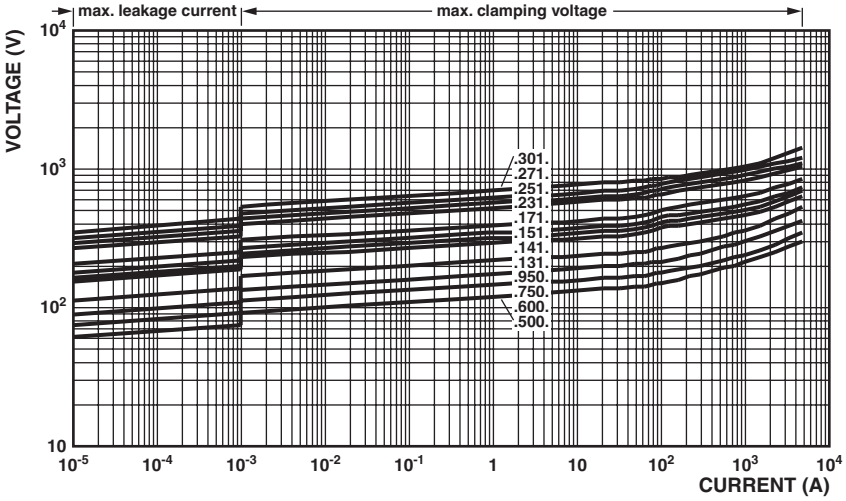

Downloaded from Elcodis.com electronic components distributor

320 V_{RMS} to 680 V_{RMS}; VDRH14.....E/2381 585 ....

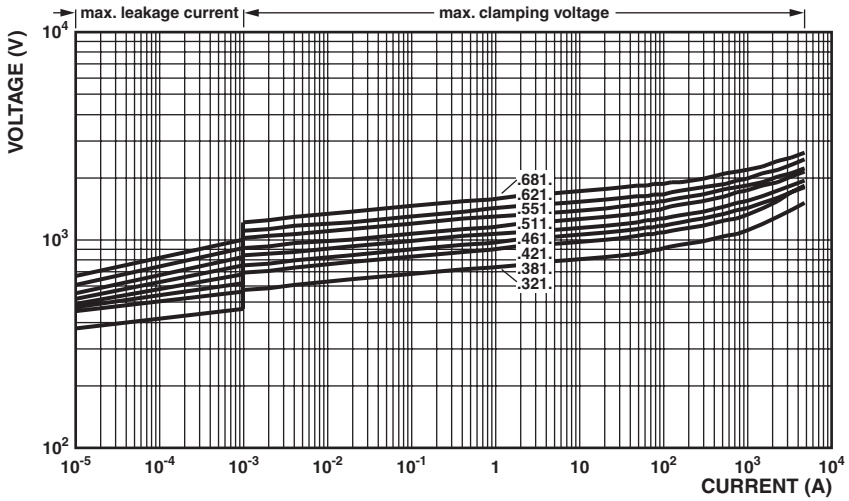

11 V_{RMS} to 40 V_{RMS}; VDRH20.....E/2381 586 ....

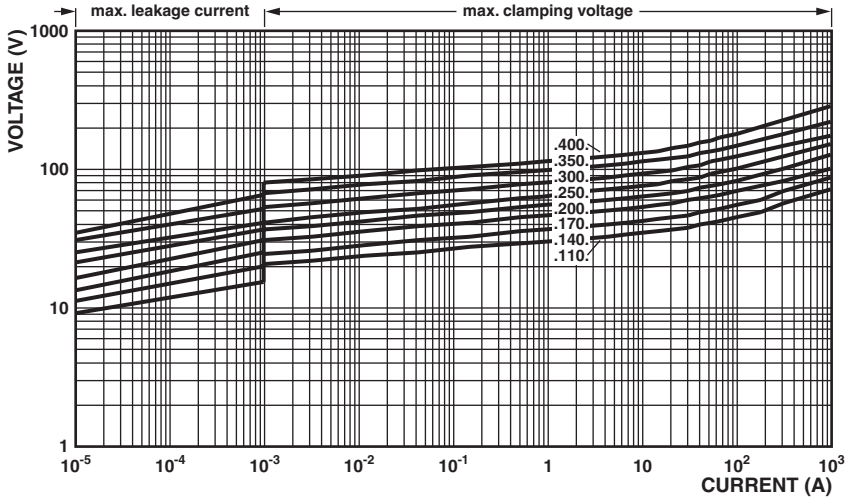

50 V_{RMS} to 300 V_{RMS}; VDRH20.....E/2381 586 ....

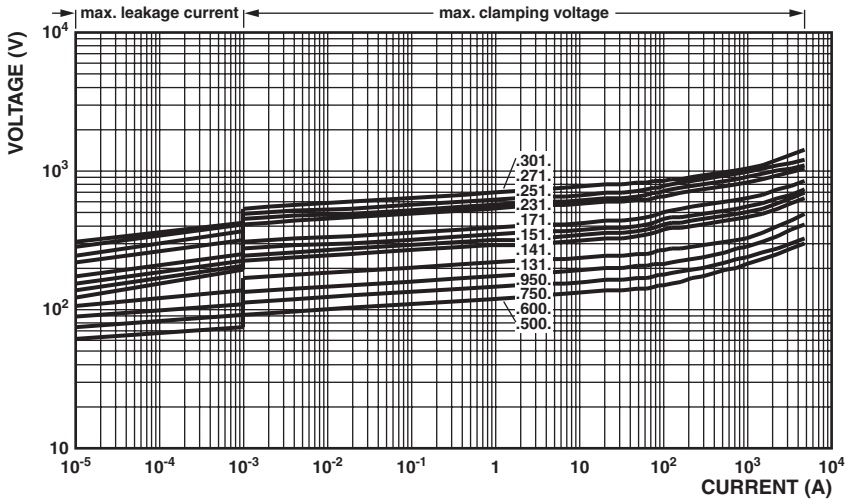

Downloaded from Elcodis.com electronic components distributor

320 V_{RMS} to 680 V_{RMS}; VDRH20.....E/2381 586 ....

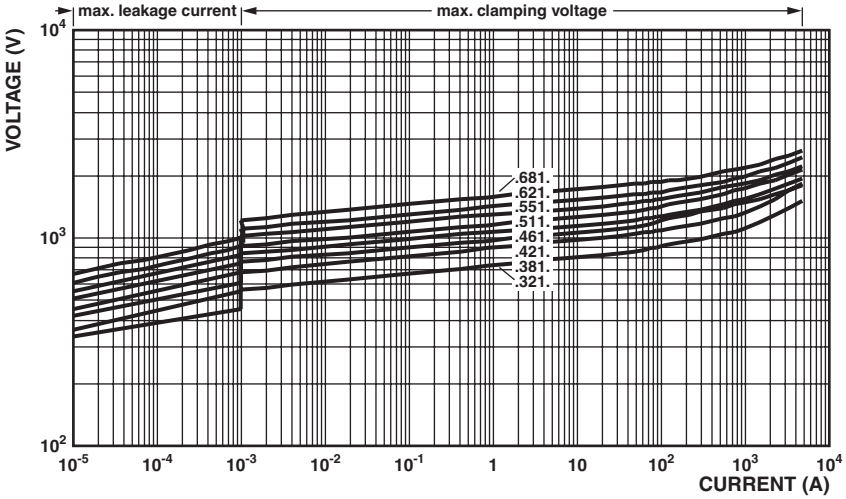

MAXIMUM APPLICABLE TRANSIENT CURRENT AS A FUNCTION OF PULSE DURATION

11 V_{RMS} to 40 V_{RMS}; VDRH05.....E/2381 582 ....

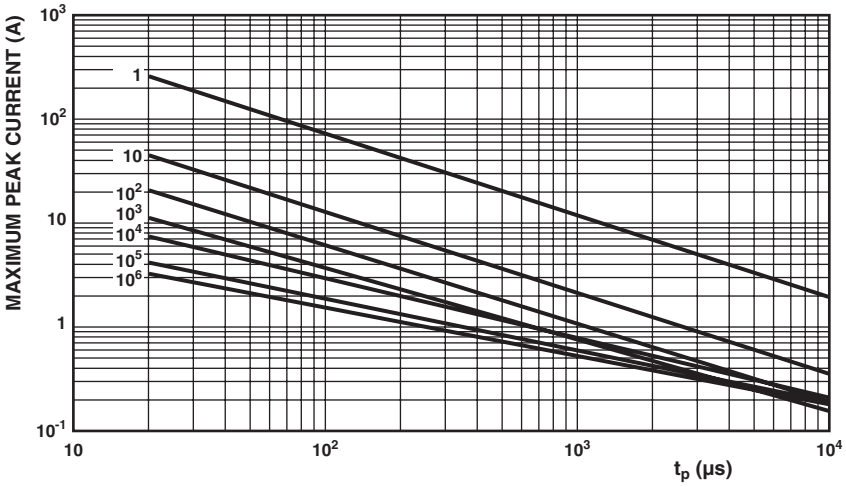

50 V_{RMS} to 300 V_{RMS}; VDRH05.....E/2381 582 ....

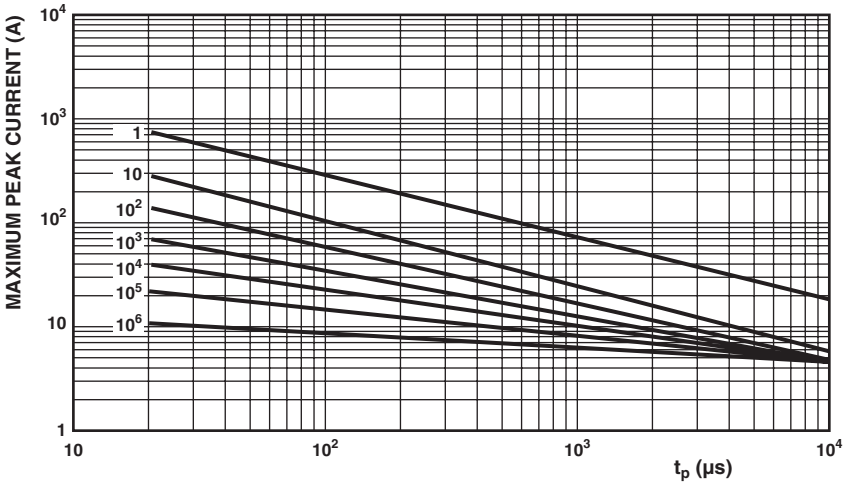

Downloaded from Elcodis.com electronic components distributor

11 V_{RMS} to 40 V_{RMS}; VDRH07.....E/2381 583 ....

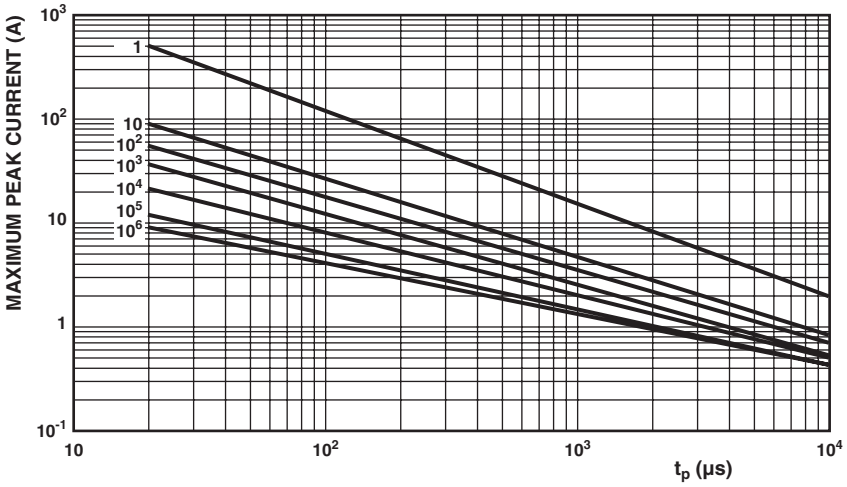

50 V_{RMS} to 300 V_{RMS}; VDRH07.....E/2381 583 ....

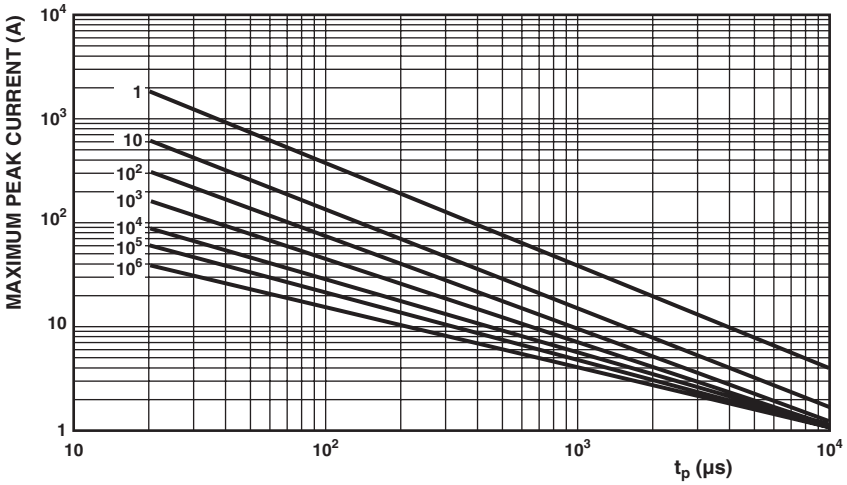

11 V_{RMS} to 40 V_{RMS}; VDRH10.....E/2381 584 ....

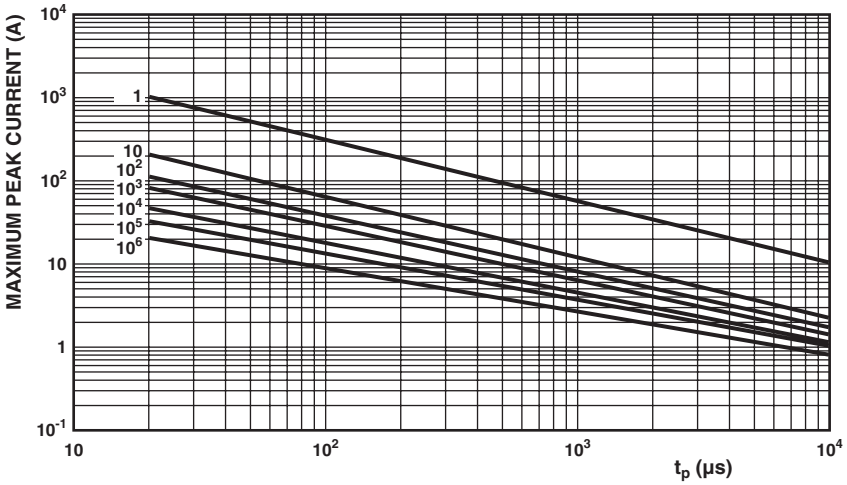

Downloaded from Elcodis.com electronic components distributor

50 V_{RMS} to 300 V_{RMS}; VDRH10.....E/2381 584 ....

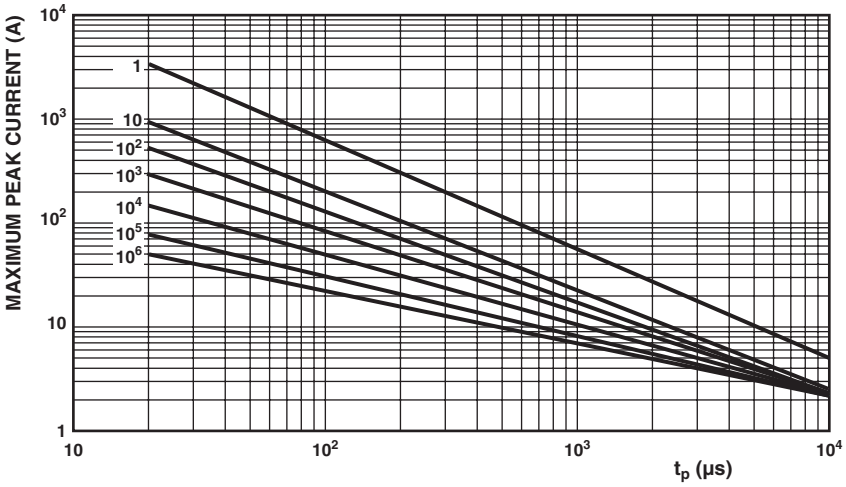

320 V_{RMS} to 680 V_{RMS}; VDRH10.....E/2381 584 ....

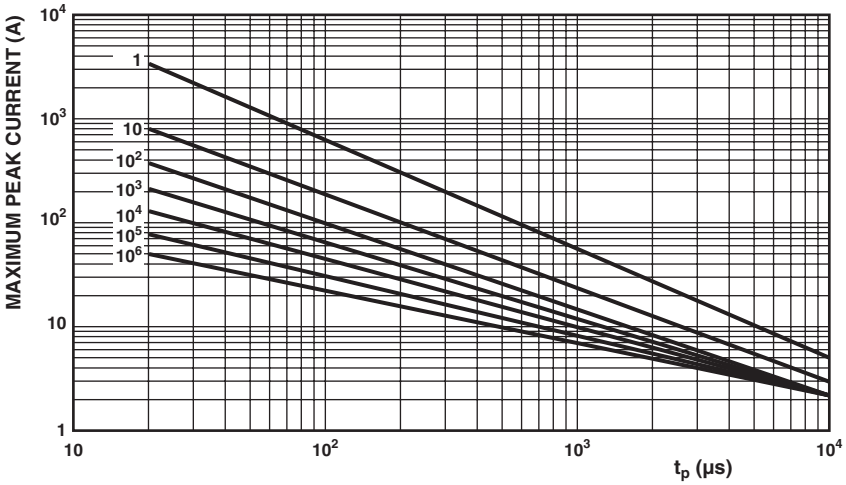

11 V_{RMS} to 40 V_{RMS}; VDRH14.....E/2381 585 ....

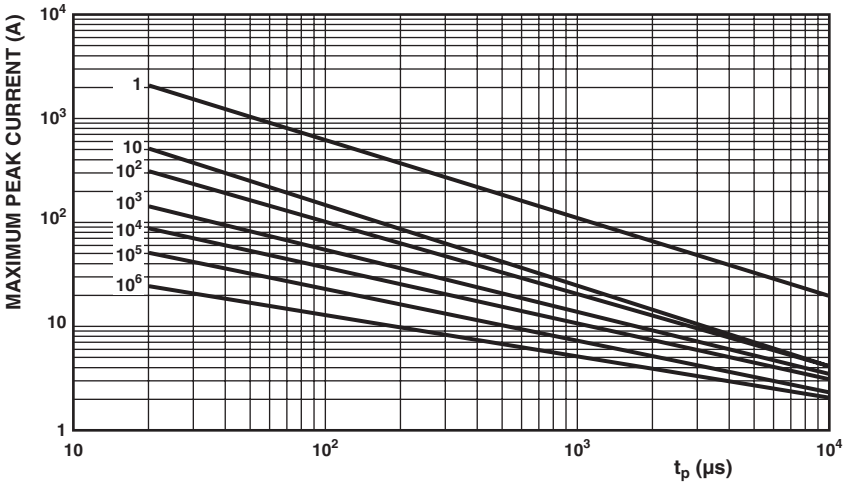

Downloaded from Elcodis.com electronic components distributor

50 V_{RMS} to 300 V_{RMS}; VDRH14.....E/2381 585 ....

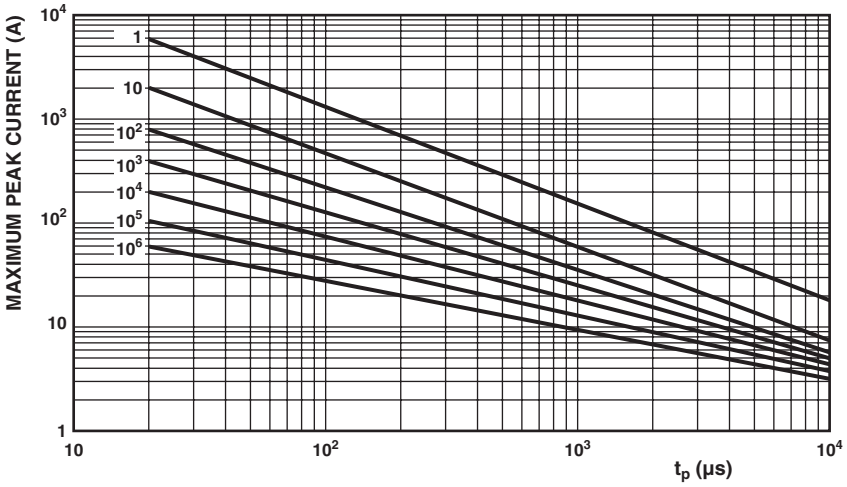

320 V_{RMS} to 680 V_{RMS}; VDRH14.....E/2381 585 ....

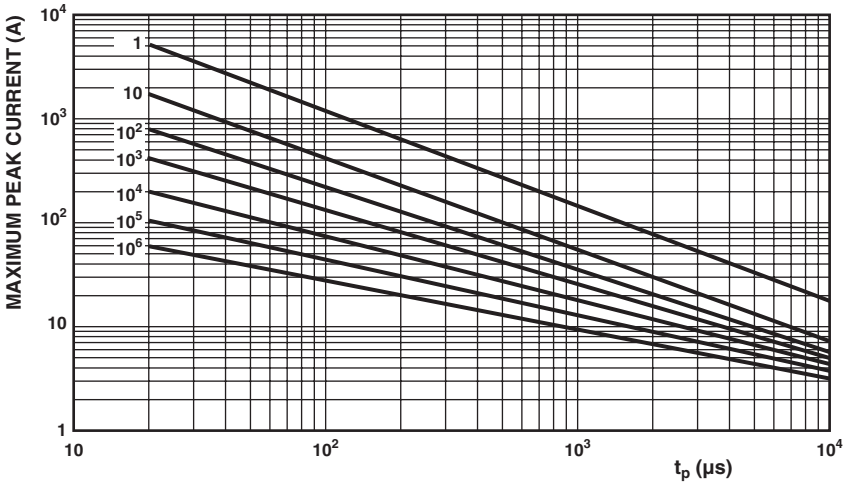

11 V_{RMS} to 40 V_{RMS}; VDRH20.....E/2381 586 ....

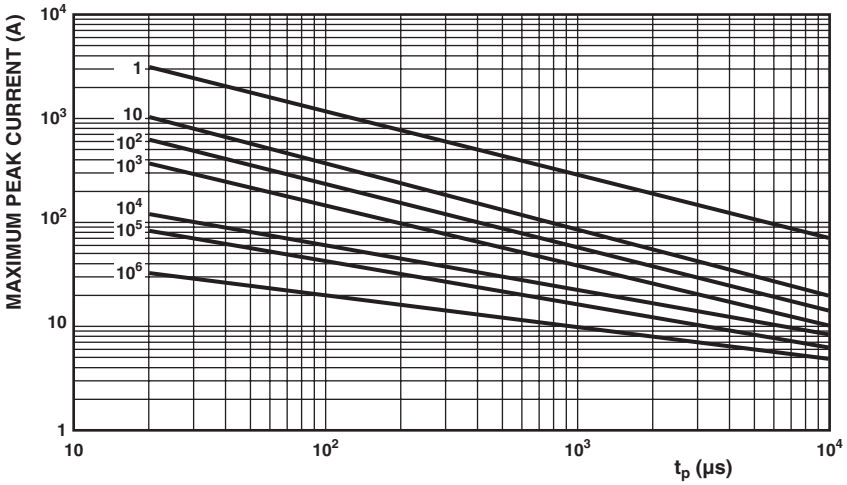

Downloaded from Elcodis.com electronic components distributor

50 V_{RMS} to 300 V_{RMS}; VDRH20.....E/2381 586 ....

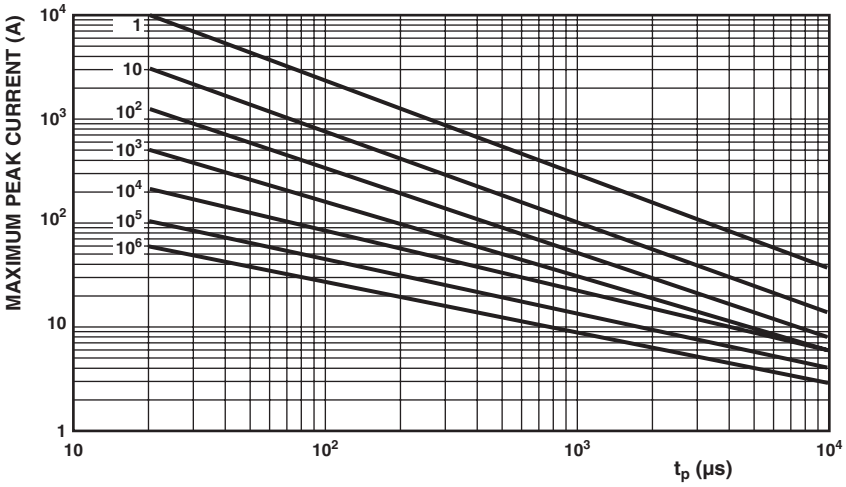

320 V_{RMS} to 680 V_{RMS}; VDRH20.....E/2381 586 ....

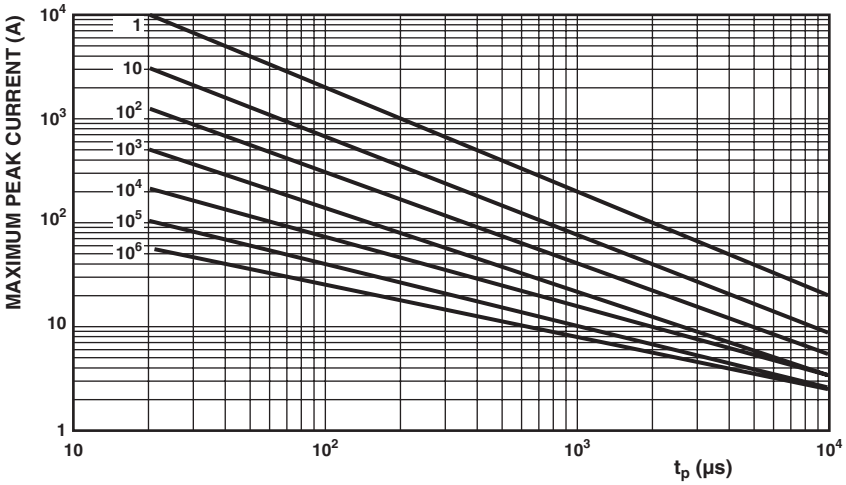

Downloaded from Elcodis.com electronic components distributor

Disclaimer

ALL PRODUCT, PRODUCT SPECIFICATIONS AND DATA ARE SUBJECT TO CHANGE WITHOUT NOTICE TO IMPROVE RELIABILITY, FUNCTION OR DESIGN OR OTHERWISE.

Vishay Intertechnology, Inc., its affiliates, agents, and employees, and all persons acting on its or their behalf (collectively, "Vishay"), disclaim any and all liability for any errors, inaccuracies or incompleteness contained in any datasheet or in any other disclosure relating to any product.

Vishay makes no warranty, representation or guarantee regarding the suitability of the products for any particular purpose or the continuing production of any product. To the maximum extent permitted by applicable law, Vishay disclaims (i) any and all liability arising out of the application or use of any product, (ii) any and all liability, including without limitation special, consequential or incidental damages, and (iii) any and all implied warranties, including warranties of fitness for particular purpose, non-infringement and merchantability.

Statements regarding the suitability of products for certain types of applications are based on Vishay's knowledge of typical requirements that are often placed on Vishay products in generic applications. Such statements are not binding statements about the suitability of products for a particular application. It is the customer's responsibility to validate that a particular product with the properties described in the product specification is suitable for use in a particular application. Parameters provided in datasheets and/or specifications may vary in different applications and performance may vary over time. All operating parameters, including typical parameters, must be validated for each customer application by the customer's technical experts. Product specifications do not expand or otherwise modify Vishay's terms and conditions of purchase, including but not limited to the warranty expressed therein.

Except as expressly indicated in writing, Vishay products are not designed for use in medical, life-saving, or life-sustaining applications or for any other application in which the failure of the Vishay product could result in personal injury or death. Customers using or selling Vishay products not expressly indicated for use in such applications do so at their own risk and agree to fully indemnify and hold Vishay and its distributors harmless from and against any and all claims, liabilities, expenses and damages arising or resulting in connection with such use or sale, including attorneys fees, even if such claim alleges that Vishay or its distributor was negligent regarding the design or manufacture of the part. Please contact authorized Vishay personnel to obtain written terms and conditions regarding products designed for such applications.

No license, express or implied, by estoppel or otherwise, to any intellectual property rights is granted by this document or by any conduct of Vishay. Product names and markings noted herein may be trademarks of their respective owners.

Downloaded from Elcodis.com electronic components distributor