SOLDER SUFFIX	CUSTOMER TERMINAL	RoHS	LEAD(Pb)-FREE
LF3	Sn100%	Yes	No

compliant RoHS WE-MIDCOM

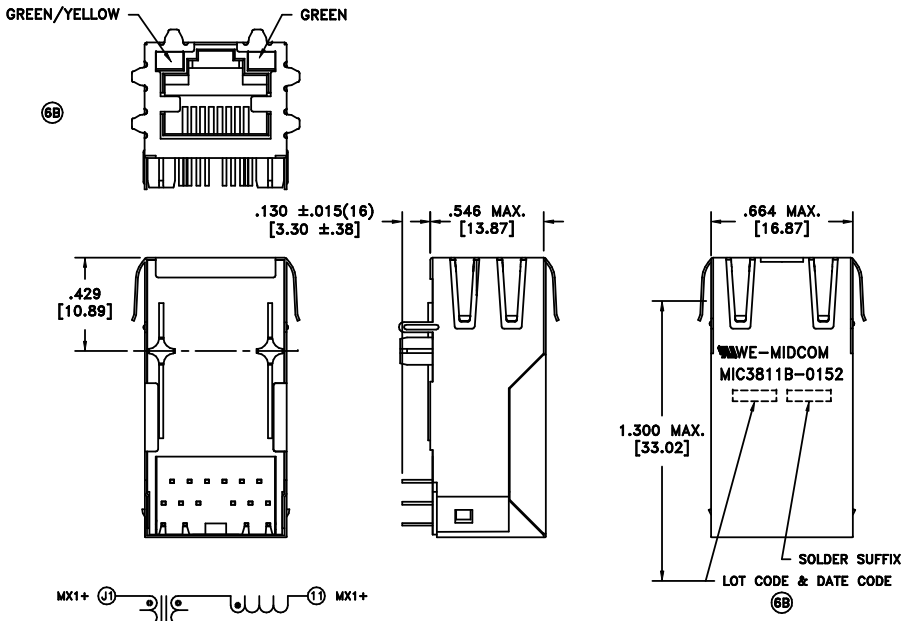

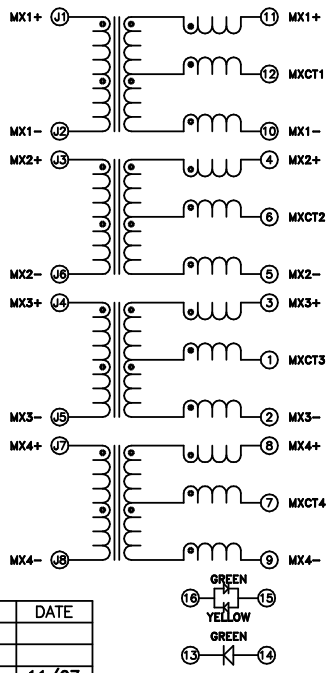

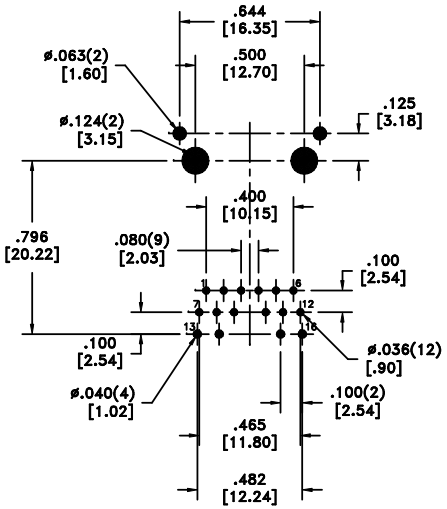

RECOMMENDED
P.C. PATTERN, COMPONENT SIDE

ELECTRICAL SPECIFICATIONS @ 25°C unless otherwise noted:

INDUCTANCE:	350uH min., 100kHz, 100mV, 8mADC, J1-J2; J3-J6; J4-J5; J7-J8, Lp.
DIELECTRIC RATING:	1500Vrms for 1 minute between P1-12 to J1-8.
TURNS RATIO/POLARITY:	Per schematic.
INSERTION LOSS:	-1.0dB max., 1MHz - 100MHz.
RETURN LOSS:	-18dB min., 1M - 30MHz. -15dB min., 30M - 60MHz. -12dB min., 60M - 80MHz.
CROSSTALK:	-40dB typ., 1MHz - 30MHz. -35dB typ., 30M - 60MHz. -30dB typ., 60M - 100MHz.
CMRR:	-30dB typ., 1MHz - 125MHz. -20dB typ., 125M - 500MHz.

OPERATING TEMPERATURE RANGE: 0°C to +70°C.

REV.	DATE
6C	11/07
6B	1/07
6A	1/06

6B

AGENCY NUMBER	
UL60950-1	E205930

Packaging Specifications
Method: Tray
PKG-0573
www.midcom-inc.com

Unless otherwise specified:
Tolerances: Fractions: ±1/64
Angles: ±1° Decimals: ±.010[.25]

This drawing is dual dimensioned. Dimensions in brackets are in millimeters.

6B

DRAWING TITLE
TRANSFORMER
GIGABIT
eiSos p/n: 7499111421

6B

Midcom-WE
www.midcom-inc.com

REVISIONS: SEE SHEET 1

DRAWING NO.
MIC3811B-0152W-LF3

SCALE ---

SHEET 2 OF 6

Downloaded from Hicofis.com electronic components distributor